LMC®

HİDROLİK BORU KELEPÇELERİ

HYDRAULIC PIPE CLAMPS

lmcmakina.com.tr

STRONGLYCONNECTED

SEKTÖRLER / INDUSTRIES

Endüstriyel ve Mobil Hidrolik
Marin Sektörü
Demir Çelik Sektörü
Maden Sektörü
Petrol ve Gaz Sektörü
İş Makinaları Sektörü
Enerji Sektörü
Makina Sektörü
Elektrik Sektörü
Savunma Sanayi
Otomasyon
Yağlama Sistemleri
Yangın Söndürme Sistemleri
Raylı Sistemler

Industrial and Mobile Hydraulics
Marine Industry
Iron Steel Industry
Mining Industry
Oil and Gas Industry
Construction Machinery Industry
Energy Industry
Machine Industry
Electirical Industry
Defense Industry
Automation
Lubrication Systems
Fire Extinguishing Systems
Railway Systems

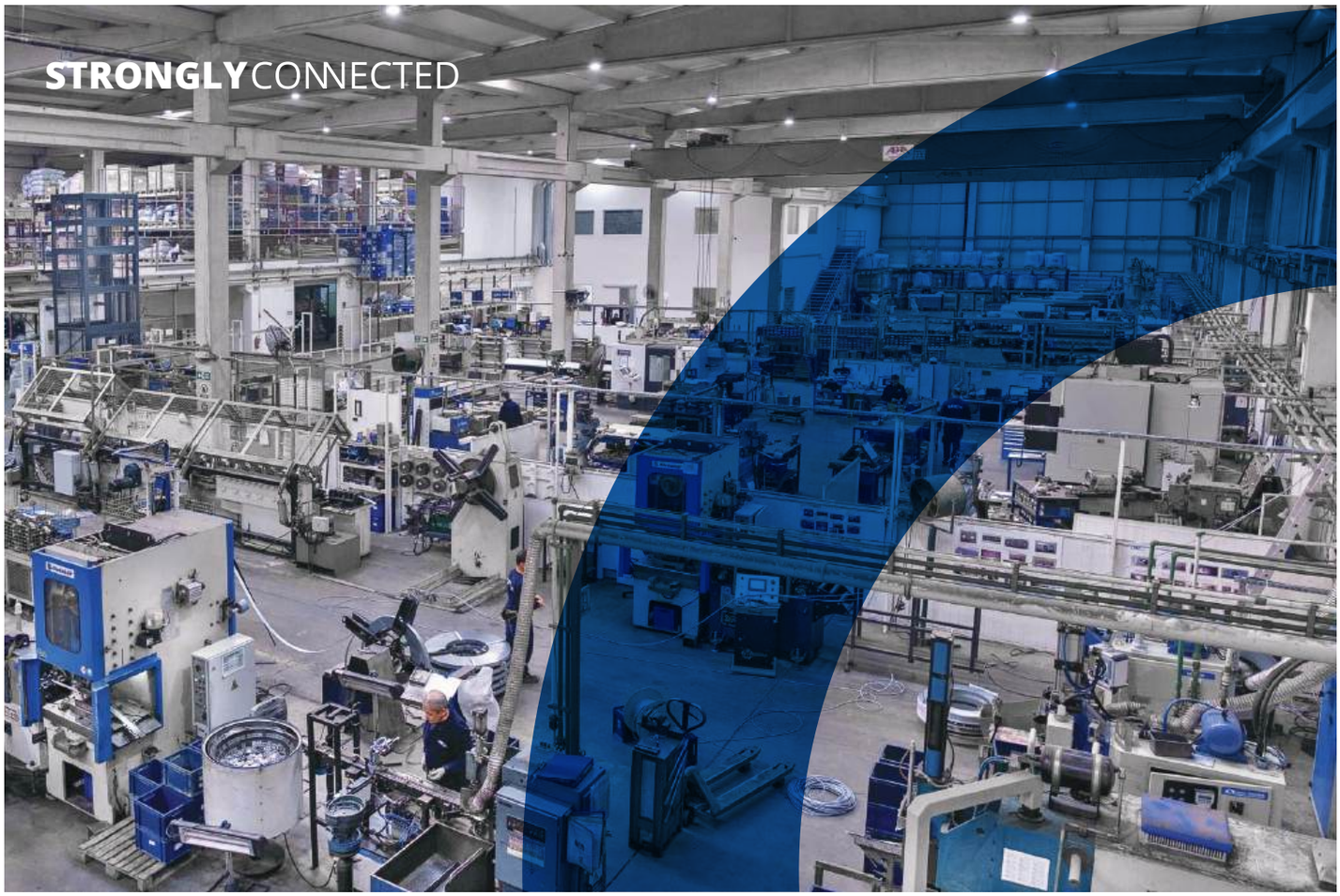

LMC, hidrolik ve pnömatik alanında 40 yılı aşkın sürede kazandığı tecrübe ile birçok sektöre kaliteli ürünler ve çözümler sunmaya devam etmektedir. Hidrolik boru kelepçesi üretiminde Türkiye'nin lider firması olan LMC; tapa & kapaklar, U-boltlar, metal kelepçeler, modüler kablo kelepçeleri (antimanyetik), profiller ve raylar gibi ürünleri de yelpazesine ekleyerek, gün geçtikçe ürün çeşitliliğini ve üretim kapasitesini arttırmaktadır.

LMC ürünleri bugün 5 kıtada 50'yi aşkın ülkede kullanılmaktadır. Firmamız, uzun yıllar boyunca kazandığı tecrübeyi, global pazarın hizmetine sunmaya devam etmektedir.

LMC has over 40 years of experience in manufacturing high quality and cost effective hydraulic and pneumatic components. LMC, Turkey's leading company in the production of hydraulic pipe clamps; increases its product variety and production capacity day by day, by adding products such as plastic caps & plugs, u-bolts, metal clamps, modular electrical (antimagnetic) clamps, profiles and rails to its range.

Long-term experience and success gained for years from the local market is now expanding with exporting to more than 50 countries in 5 continents.

ISO 9001:2015 · ISO 45001:2018 · ISO 14001:2015 · Lloyd's Register · EN 45545

LMC®

Standart Seri / Standard Series

DIN 3015/1

Komple Kelepçe Complete Clamp 1
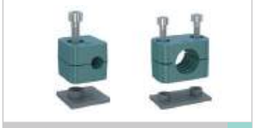
Gövde+Cıvata Clamp Body+Screw 2

Sayfa / Page 8

Gövde+Cıvata+Üstlük Clamp Body+Bolt+Cover Plate 3

Çift Plakalı Kelepçe Double Plated Clamp 4

Sayfa / Page 9

Montaj Delikli Kelepçe Complete Clamp with Elongated Weld Plate 5

Çift Plakalı Montaj Delikli Kelepçe/Double Plated Clamp with Elongated Weld Plate 6

Sayfa / Page 10

Raya Uyumlu Kelepçe Clamp with Rail Nut 7

Raya Uyumlu Üstlüklü Kelepçe/Clamp with Cover Plate + Rail Nut 8

Sayfa / Page 11

Kelepçe Üst Takım Clamp Upper Set 9

Kelepçe Gövdesi Clamp Body 10

Sayfa / Page 12

Alt Plaka Weld Plate 11
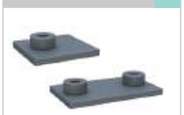
Montaj Delikli Alt Plaka Elongated Weld Plate 12

Sayfa / Page 13

İkili Alt Plaka Twin Weld Plate 13

Çoklu Alt Plaka Group Weld Plate 14

Sayfa / Page 14

L Altlık Angled Weld Plate 15

Üst Plaka Cover Plate 16

Sayfa / Page 15

Montaj Rayı Mounting Rail 17

Ray Somunu Rail Nut 18

Sayfa / Page 16

Gömme Başlı Cıvata Socket Cap Screw 19

Altıköşe Başlı Cıvata Hexagon Head Bolt 20

Sayfa / Page 17

Ara Bağlantı Cıvatası Stacking Bolt 21

Ara Bağlantı Plakası Safety Locking Plate 22

Sayfa / Page 18

Ara Bağlantı Plakası Safety Locking Plate 23

Sayfa / Page 19

Ağır Seri / Heavy Series

DIN 3015/2

Komple Kelepçe Complete Clamp 24

Gövde + Cıvata + Üstlük Clamp Body + Bolt + Cover Plate 25

Sayfa / Page 22-23

Montaj Delikli Kelepçe Complete Clamp with Elongated Weld Plate 26

Sırt Sırta Kelepçe Double Clamp 27

Sayfa / Page 24-25

Sırt Sırta Montaj Delikli Kelepçe Double Clamp with Elongated Weld Plate 28

Raya Uyumlu Kelepçe Clamp with Rail Nut 29

Sayfa / Page 26-27

Kelepçe Üst Takım Clamp Upper Set 30

Gövde + Cıvata + Altlık Clamp Body + Screw + Weld Plate 31

Sayfa / Page 28-29

Kelepçe Gövdesi Clamp Body 32
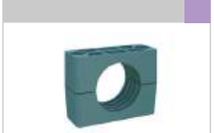
Alt Plaka Weld Plate 33

Sayfa / Page 30-31

Üst Plaka Cover Plate 34

Montaj Delikli Alt Plaka/Elongated Weld Plate 35

Sayfa / Page 32-33

Sırt Sırta Kelepçe için Alt Plaka/Weld Plate for Double Clamps 36

Sırt Sırta Kelepçe için Montaj Delikli Alt Plaka Elongated Weld Plate for Double Clamps 37

Sayfa / Page 34-35

Sırt Sırta Kelepçe için Üst Plaka/Cover Plate for Double Clamps 38

Ara Bağlantı Plakası Safety Locking Plate 39

Sayfa / Page 36-37

Altıköşe Başlı Cıvata Hexagon Head Bolt 40

Ara Bağlantı Cıvatası Stacking Bolt 41

Sayfa / Page 38-39

Montaj Rayı Mounting Rail 42

Ray Somunu Rail Nut 43

Sayfa / Page 40

İkiz Seri / Twin Series

DIN 3015/3

Komple Kelepçe / Complete Clamp 44
Göv. + Cıv.+ Üstlük / Cl. Body+Bolt+Cov. Pl. 46
Kelepçe Üst Takım / Clamp Upper Set 48
Kilitlemeli Klp. Göv. / Anti Rotary Cl. Body 50
Mon. Del. Alt Pl. / Elongated Weld Plate 52
Üst Plaka / Cover Plate 54
Montaj Rayı / Mounting Rail 56
Altıköşe Başlı Cıv. / Hexagon Head Bolt 58
Ara Bağ. Plakası / Safety Locking Plate 60
Montaj Del. Kom. K. / Co. Cl. with El. Weld Plate 45
Raya Uyumlu Kel. / Clamp with Rail Nut 47
Kelepçe Gövdesi / Clamp Body 49
Alt Plaka / Weld Plate 51
Bombeli Altlık / Weld Pl.with Lock Dut 53
Çoklu Alt Plaka / Group Weld Plate 55
Ray Somunu / Rail Nut 57
Ara Bağlantı Cıv. / Stacking Bolt 59
Sayfa / Page 50
Sayfa / Page 42
Sayfa / Page 43
Sayfa / Page 44
Sayfa/Page 45-46
Sayfa/Page 46-47
Sayfa/Page 47-48
Sayfa/Page 48-49
Sayfa/Page 49-50

L Serisi Kelepçeler
L-Series Clamps

K Serisi Klp.
K-Series Clamps

V Serisi Kelepçeler
V-Series Clamps

Kelepçe Gövdesi / Clamp Body 61
Kelepçe Gövdesi / Clamp Body 63
Kelepçe Gövdesi / Clamp Body 65
Komple Kelepçe / Complete Clamp 67
Göv.+Cıv.+Üstlük / Body+Bolt+Cov. Plate 69
Alt Plaka / Weld Plate 71
Komple Kelepçe / Complete Clamp 74
Göv.+Cıv.+Üstlük / Body+Bolt+Cov. Plate 76
Alt Plaka / Weld Plate 78
Komple Kelepçe / Complete Clamp 62
Üst & Alt Plaka / Cover & Weld Plate 64
Kelepçe Gövdesi / Clamp Body 66
Raya Tuç Üst. Kel. / Cl. with Co. Pl.+Ra. N. 68
Kelepçe Gövdesi / Clamp Body 70
Üst Plaka / Cover Plate 72
Raya Tuç Üst. Kel. / Cl. with Co. Pl.+Ra. N. 75
Kelepçe Gövdesi / Clamp Body 77
Üst Plaka / Cover Plate 79
Sayfa / Page 52
Sayfa / Page 53
Sayfa / Page 54-55
Sayfa / Page 56
Sayfa / Page 57
Sayfa / Page 58
Sayfa / Page 60
Sayfa / Page 61
Sayfa / Page 62

Modüler Kablo Kelepçesi
Moduler Cable Clamps

Standart Seri Elastomerli Kelepçeler
Standart Series Clamps with Elastomer Insert

Ağır Seri Elastomerli Kelepçeler
Heavy Series Clamps with Elastomer Insert

Ağır Seri İkiz Kelepçeler
Heavy Series Twin Clamps

Kelepçe Gövdesi / Clamp Body 81
Komple Kelepçe / Complete Clamp 82
Çift Plakalı Kelepçe / Double Plated Clamp 84
Kelepçe Gövdesi / Clamp Body 86
Çift Plakalı Kelepçe / Double Plated Clamp 87
Kelepçe Gövdesi / Clamp Body 89
Komple Kelepçe / Complete Clamp 90
Alt Plaka / Weld Plate 92
Boru Des. Klp. / Tube Supporting Clp. 95
Montaj Del. Kelepçe / Complete Clamp with Elongated Weld Plate 83
Çift Plakalı Montaj Del. Kelepçe / Double Plated Clamp Elongated Weld Plate 85
Çift Plakalı Montaj Del. Kelepçe / Double Plated Clamp Elongated Weld Plate 88
Kelepçe Gövdesi / Clamp Body 91
Üst Plaka / Cover Plate 93
Altıköşe Başlı Cıv. / Hexagon Head Bolt 94
Sayfa / Page 66
Sayfa / Page 68
Sayfa / Page 69
Sayfa / Page 70
Sayfa / Page 71
Sayfa / Page 72
Sayfa / Page 73
Sayfa / Page 74
Sayfa / Page 75

Diğer Kelepçe Grupları ve Aksesuarlar - Teknik Bilgiler
Other Clamp Groups & Accessories - Technical Data

Metal Boru Kelepçesi / Metal Pipe Clamps 96
Metal Boru Kelepçesi / Metal Pipe Clamps 98
Metal Boru Kelepçesi / Metal Pipe Clamps 100
Metal Boru Kelepçesi / Metal Pipe Clamps 102
U Bolt Kelepçeler / Round Steel U-Bolt 104
U Bolt Kelepçeler / Round Steel U-Bolt 106
Boru Klp. Teknik Bilgi / Pipe Clp. Techical Data
Özel Üretim Kelepçeler / Special Production Clamps
DIN 3567/ Type A
DIN 3567/ Type B
DIN 1592
DIN 1596
DIN 3570 / Type A
DIN 3570 / Type A
Metal Boru Kelepçesi / Metal Pipe Clamps 97
Metal Boru Kelepçesi / Metal Pipe Clamps 99
Metal Boru Kelepçesi / Metal Pipe Clamps 101
Metal Boru Kelepçesi / Metal Pipe Clamps 103
U Bolt Kelepçeler / Round Steel U-Bolt 105
U Bolt Kelepçeler / Round Steel U-Bolt 107
DIN 3567/ Type A
DIN 3567/ Type B
DIN 1593
DIN 1597
DIN 3570 / Type A
DIN 3570 / Type A
Sayfa / Page 78-79
Sayfa / Page 80-81
Sayfa / Page 82-83
Sayfa / Page 84-85
Sayfa / Page 86-87
Sayfa / Page 88-89
Sayfa / Page 92-95
Sayfa / Page 96-97

KOMPLE KELEPÇELER / COMPLETE CLAMPS

Cins Type	Bağlantı Parçaları Fitting Components					Kelepçe Gövdesi Clamp Body			Boyut Dimension	
* *	* *	*	*	*	*	*	*	*	* * *	* * * . *

Cins / Type

CD	**Demonte** / Unmounted
CM	**Montajlı** / Assambled

Vida Tipi / Thread Type

C	**UNC**
F	**UNF**
M	**Metrik** / Metric
W	**Whitworth**
T	**Tanımsız** / Undefined

Cıvata + Altlık Tipi / Screw - Bolt Types + Weld Plate

00	**GB + Standart Altlık** / Standard Weld Plate
01	**GB + Montaj Delikli Altlık** / Elongated Weld Plate
28	**GB + Altlıksız** / Without Weld Plate
30	**GB + Ray Somunlu** / With Rail Nut
40	**AKB + Standart Altlık** / Standard Weld Plate
41	**AKB + Montaj Delikli Altlık** / Elongated Weld Plate
60	**AKB + Sırt Sırta Altlık** / Weld Plate for Double Clamps
61	**AKB + Sırt Sırta Montaj Delikli Altlık** / Elongated Weld Plate for Double Clamps
68	**AKB + Altlıksız** / Without Weld Plate
70	**AKB + Ray Somunlu** / With Rail Nut
aa	**Altlıksız Cıvatasız** / Without Weld Plate and Without Screw-Bolt

GB : Gömme Başlı Cıvata (İmbus) / Socket Cap Screw
AKB : Altı Köşe Başlı Cıvata / Hexagon Head Bolt

Renk / Colour

H	**Siyah** / Black
M	**Mavi** / Blue
S	**Sarı** / Yellow
T	**Natürel** / Natural
Y	**Yeşil** / Green

Gövde Tipi / Clamp Body Design

1	**Kanallı** / Profiled
2	**Düz** / Smooth
2R	**Düz Kitlemeli** / Smooth Anti Rotary
4	**Elastomerli** / For Elastomer Insert
5	**Tırtırlı** / Serrated
5R	**Tırtırlı Kitlemeli** / Serrated Anti Rotary

Gövde Malzemesi / Clamp Body Material

A	**Alüminyum** / Aluminum
N	**Polyamid** / Polyamide
T	**TPE** (Thermoplastic Elastomer)
P	**Polipropilen** / Polypropylene
K	**UV Katkılı PP** / UV Additive PP
U	**UV Katkılı PA** / UV Additive PA

Ölçü / Size

006.0 mm

406.4 mm

Üstlük + Ara Plaka Tipi / Cover Plates + Connection Types

0	**Üstlüksüz** / Without Cover Plate
1	**Üstlüklü** / With Cover Plate
6	**Ara Plakalı, Ara Cıvatalı** / With Safety Locking Plate, Stacking Bolt

Üstlük / Cover Plate

Altlık / Weld Plate

Metal+Kaplama Tipi / Metal+Surface Finishing

0	**Kaplamasız** / Uncoated
1	**Fosfat** / Phosfated
2	**Delta DMS**
3	**Fe/Zn 8C Cr3-B / Galvaniz** / Galvanised
4	**CrNi 304** / AISI 304
6	**CrNi 316** / AISI 316
9	**Çinko Nikel (Fe/ZnNi)** / Zinc/Nickel

Grup / Group

G0-G1.....G7-G8	**Standart Seri** / Standard Series
A1-A2.....A9-A0	**Ağır Seri** / Heavy Series
H2-H3	**Ağır Seri İkiz Kelepçeler** / Heavy Series Twin Design
I1-I2-I3-I4-I5	**İkiz Seri** / Twin Series
L1-L2-L3-L4	**L Serisi** / L Series
K1-K2-K3-K4	**K Serisi** / K Series
V1-V2-V3-V4	**V Serisi** / V Series

KELEPÇE GÖVDESİ / CLAMP BODY

* *	*	*	*	* *	* * * . *

Cins / Type

C1	**Tek Gövde** / Clamp Halve
C2	**Gövde Takım** / Clamp Body

Gövde Malzemesi / Clamp Body Material

A	**Alüminyum** / Aluminum
N	**Polyamid** / Polyamide
T	**TPE** (Thermoplastic Elastomer)
P	**Polipropilen** / Polypropylene
K	**UV Katkılı PP** / UV Additive PP
U	**UV Katkılı PA** / UV Additive PA

Gövde Tipi / Clamp Body Design

1	**Kanallı** / Profiled
2	**Düz** / Smooth
2R	**Düz Kitlemeli** / Smooth Anti Rotary
4	**Elastomerli** / For Elastomer Insert
5	**Tırtırlı** / Serrated
5R	**Tırtırlı Kitlemeli** / Serrated Anti Rotary

Renk / Colour

H	**Siyah** / Black
M	**Mavi** / Blue
S	**Sarı** / Yellow
T	**Natürel** / Natural
Y	**Yeşil** / Green

Grup / Group

G0-G1.....G7-G8	**Standart Seri** / Standard Series
A1-A2.....A9-A0	**Ağır Seri** / Heavy Series
H2-H3	**Ağır Seri İkiz Kelepçeler** / Heavy Series Twin Design
I1-I2-I3-I4-I5	**İkiz Seri** / Twin Series
L1-L2-L3-L4	**L Serisi** / L Series
K1-K2-K3-K4	**K Serisi** / K Series
V1-V2-V3-V4	**V Serisi** / V Series

Ölçü / Size

006.0 mm

406.4 mm

METAL PARÇALAR / METAL PARTS

* * | * * | * | * | * * * . *

Cins / Type

CA	**Altlık** / Weld Plate
CH	**Ara Plaka** / Safety Locking Plate
CU	**Üstlük** / Cover Plate

Tip / Design

00	**Standart** / Standard
01	**Montaj Delikli** / Elongated
02	**İkili** / Double
03	**Üçlü** / Triple
	.....
	.....
	.....
20	**Sırt Sırta** / Double Weld Plate
21	**Sırt Sırta Montaj Delikli** / Elongated Double Weld Plate
27	**L Altlık** / Angled Weld Plate

Vida Tipi / Thread Type

C	**UNC**
F	**UNF**
M	**Metrik** / Metric
W	**Whitworth**
T	**Tanımsız** / Undefined

Metal+Kaplama Tipi / Metal+Surface Finishing

0	**Kaplamasız** / Uncoated
1	**Fosfat** / Phosfated
2	**Delta DMS**
3	**Fe/Zn 8C Cr3-B** / **Galvaniz** / Galvanised
4	**CrNi 304** / AISI 304
6	**CrNi 316** / AISI 316
9	**Çinko Nikel (Fe/ZnNi)** / Zinc/Nickel

Grup / Group

G0-G1.....G7-G8	**Standart Seri** / Standard Series
A1-A2.....A9-A0	**Ağır Seri** / Heavy Series
H2-H3	**Ağır Seri İkiz Kelepçeler** / Heavy Series Twin Design
I1-I2-I3-I4-I5	**İkiz Seri** / Twin Series
L1-L2-L3-L4	**L Serisi** / L Series
K1-K2-K3-K4	**K Serisi** / K Series
V1-V2-V3-V4	**V Serisi** / V Series

CIVATA / SCREW-BOLT

* * | * | * | * | * * * | * * *

Cins / Type

CC	**Cıvata** / Screw, Bolt

Cıvata Tipi / Screw-Bolt Type

A	**Altıköşe Başlı** / Hexagon Head Bolt
B	**Ara Bağlantı** / Stacking Bolt
G	**Gömme Başlı Cıvata (İmbus)** / Socket Cap Screw

Vida Tipi / Thread Type

C	**UNC**
F	**UNF**
M	**Metrik** / Metric
W	**Whitworth**

Metal+Kaplama Tipi / Metal+Surface Finishing

2	**Delta DMS**
3	**Fe/Zn 8C Cr3-B** / **Galvaniz** / Galvanised
4	**CrNi 304** / AISI 304
6	**CrNi 316** / AISI 316
9	**Çinko Nikel (Fe/ZnNi)** / Zinc/Nickel

Vida Ölçüsü / Screw - Bolt Size

Cıvata Boyu / Screw - Bolt Length

RAY SOMUNU / RAIL NUT

* * * | * | * | * | * * *

Cins / Type

CRS	**Ray Somunu** / Rail Nut

Tip / Design

1	**Standart** / Standard
2	**Yuvarlak** / Round
5	**Contalı** / With Rubber Head

Vida Tipi / Thread Type

C	**UNC**
F	**UNF**
M	**Metrik** / Metric
W	**Whitworth**

Metal+Kaplama Tipi / Metal+Surface Finishing

2	**Delta DMS**
3	**Fe/Zn 8C Cr3-B** / **Galvaniz** / Galvanised
4	**CrNi 304** / AISI 304
6	**CrNi 316** / AISI 316
9	**Çinko Nikel (Fe/ZnNi)** / Zinc/Nickel

Vida Ölçüsü / Screw - Bolt Size

RAY / RAIL

* * * | * | * * * * | *

Cins / Type

CRY	**Ray** / Rail

Metal+Kaplama Tipi / Metal+Surface Finishing

0	**Kaplamasız** / Uncoated
2	**Delta DMS**
3	**Fe/Zn 8C Cr3-B** / **Galvaniz** / Galvanised
4	**CrNi 304** / AISI 304
6	**CrNi 316** / AISI 316
9	**Çinko Nikel (Fe/ZnNi)** / Zinc/Nickel

Ölçü / Size

Boy / Lenght

LMC HİDROLİK BORU KELEPÇELERİ
LMC HYDRAULIC PIPE CLAMPS

LMC Hidrolik Boru Kelepçeleri; boru montajlarında hız, düzgünlük ve temizlik sağlamaları nedeniyle endüstriyel alanlarda vazgeçilmez makina elemanlarıdır. LMC Hidrolik Boru Kelepçeleri; endüstriyel standartlara uygun olarak üretilmektedir. LMC Hidrolik Boru Kelepçeleri'nin kullanılması; sistemlerde oluşacak ses ve titreşimi azaltarak, operatör ve sistemlerin daha sağlıklı ve güvenli çalışmasını sağlar. LMC Hidrolik Boru Kelepçeleri; iş makinalarında, enerji nakil hatlarında, gemi hidroliğinde ve tüm endüstriyel sahalarda rahatlıkla kullanılabilmektedir. LMC Hidrolik Boru Kelepçeleri; özellikle iş makinalarında meydana gelen titreşimleri absorbe etmelerinden dolayı çevre korumada önemli rol almaktadır. LMC Hidrolik Boru Kelepçeleri; enerji sektörünün önemli projelerinde, yüksek gerilim kablolarının güvenle sabitlenmesi için kullanılmaktadır. LMC Hidrolik Boru Kelepçeleri; gemi imalatında, uzun boru hatlarının sorunsuz çalışmasını sağlamak için kullanılan önemli aksesuarlardandır.

LMC Hydaulic Pipe Clamps are indispensable machinary components that provide quick and easy pipes/hoses installation together with a clean and rational pipeline. LMC Hydaulic Pipe Clamps are manufactured according to international standarts. Using LMC Hydraulic Pipe Clamps reduces noise and vibration on the machinery significantly having a direct effect on the users' health and safety as well as the machinery. While applications of LMC Hydraulic Pipe Clamps are boundless, most frequent fields of utilization include but not limited to; operating machinery, energy transfer lines, marine hydraulics and all industrial areas. LMC Hydraulic Pipe Clamps have an important role in environmental protection; by especially absorbing the vibrations of the construction equipments. LMC Hydraulic Pipe Clamps are used in energy industries' critical projects to fix the high voltage cables safely. LMC Hydraulic Pipe Clamps are one of the most important accessories used in naval construction to ensure problem-free operation of long pipelines.

LMC®

STANDART SERİ
STANDART SERIES

DIN 3015 / 1

lmcmakina.com.tr

Metal + Kaplama Tipi Metal + Surface Finishing		Gövde Malzemesi Clamp Body Material	
0	Kaplamasız / Uncoated	A	Alüminyum / Aluminum
1	Fosfat / Phosphated / Fe/Znph	N	Polyamid / Polyamide
3	Galvaniz / Galvanized / Fe/Zn 8C Cr3-B	T	TPE
4	CrNi 304 AISI 304	P	Polipropilen / Polypropylene
6	CrNi 316 AISI 316		
9	Çinko Nikel / Zinc Nickel Fe/ZnNi		

Farklı malzeme talepleriniz için lütfen LMC Makina'ya danışınız.

For different material request please consult LMC Makina.

Komple Kelepçe
Complete Clamp **1**

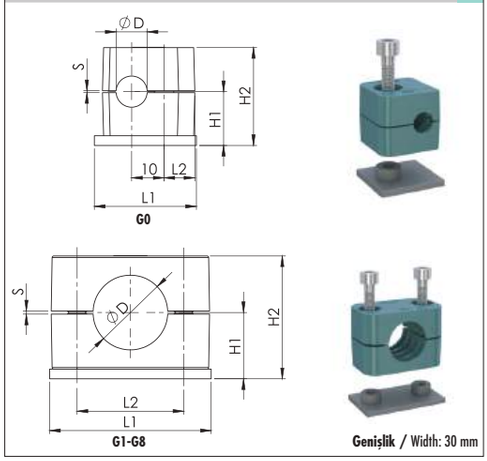

Genişlik / Width: 30 mm

Gövde + Cıvata
Clamp Body + Screw **2**

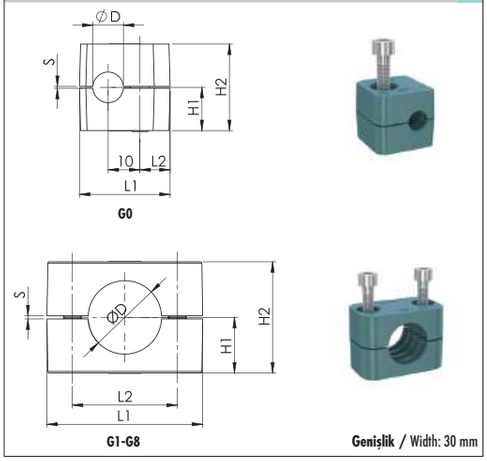

Genişlik / Width: 30 mm

C	M	0	0	M	0	0	1	P	1	Y	G	1	X	X	X	.	X
					Üstlük Cover Plate	**Üstlük Kaplama Tipi** Cover Plate Finishing	**Altlık Kaplama Tipi** Weld Plate Finishing	**Gövde Malzemesi** Clamp Body Material		**Gövde Renk** Clamp Body Colour	**Grup** Group		**Ölçü** Size				

C	D	2	8	M	0	0	3	P	1	Y	G	1	X	X	X	.	X
					Üstlük Cover Plate	**Üstlük Kaplama Tipi** Cover Plate Finishing	**Altlık Kaplama Tipi** Weld Plate Finishing	**Gövde Malzemesi** Clamp Body Material		**Gövde Renk** Clamp Body Colour	**Grup** Group		**Ölçü** Size				

Grup Group	Dış Çap (ØD) O.D. of Pipe / Tube/Hose mm	Anma Çapı (R) Boru Diş Nominal Bore Pipe inch	Dış Çap (ØD) O.D. of Pipe / Tube/Hose inch	Ölçü Tablosu Dimension Table L1	L2	H1	H2	S min.	Sipariş Kodu Order Code
G0	6			28	9.5	16.5	30	0.4	CM00M001P1YG0006.0
	6.4		1/4						CM00M001P1YG0006.4
	8		5/16						CM00M001P1YG0008.0
	9.5		3/8						CM00M001P1YG0009.5
	10	R 1/8							CM00M001P1YG0010.0
	12								CM00M001P1YG0012.0
G1	6			36	20	16.5	30	0.4	CM00M001P1YG1006.0
	6.4		1/4						CM00M001P1YG1006.4
	8		5/16						CM00M001P1YG1008.0
	9.5		3/8						CM00M001P1YG1009.5
	10	R 1/8							CM00M001P1YG1010.0
	12								CM00M001P1YG1012.0
G2	12.7		1/2	42	26	19.5	36	0.6	CM00M001P1YG2012.7
	13.5	R 1/4							CM00M001P1YG2013.5
	14								CM00M001P1YG2014.0
	15								CM00M001P1YG2015.0
	16		5/8						CM00M001P1YG2016.0
	17.2	R 3/8							CM00M001P1YG2017.2
	18								CM00M001P1YG2018.0
G3	19		3/4	50	33	21	39	0.6	CM00M001P1YG3019.0
	20								CM00M001P1YG3020.0
	21.3	R 1/2							CM00M001P1YG3021.3
	22		7/8						CM00M001P1YG3022.0
	23								CM00M001P1YG3023.0
	25								CM00M001P1YG3025.0
	25.4		1						CM00M001P1YG3025.4
G4	26.9	R 3/4		59	40	24	45	0.6	CM00M001P1YG4026.9
	28								CM00M001P1YG4028.0
	30								CM00M001P1YG4030.0
G5	32		1 1/4	71	52	32	61	0.8	CM00M001P1YG5032.0
	33.7	R 1							CM00M001P1YG5033.7
	35								CM00M001P1YG5035.0
	38		1 1/2						CM00M001P1YG5038.0
	40								CM00M001P1YG5040.0
	42	R 1 1/4							CM00M001P1YG5042.0
G6	44.5		1 3/4	86	66	36	69	0.8	CM00M001P1YG6044.5
	48.3	R 1 1/2							CM00M001P1YG6048.3
	50.8		2						CM00M001P1YG6050.8
G7	57.2		2 1/4	121	94	51.5	98	0.8	CM00M001P1YG7057.2
	60.3	R 2							CM00M001P1YG7060.3
	63.5		2 1/2						CM00M001P1YG7063.5
	70		2 3/4						CM00M001P1YG7070.0
	73								CM00M001P1YG7073.0
	76.1	R 2 1/2	3						CM00M001P1YG7076.1
G8	88.9	R 3	3 1/2	147	120	64	123	0.8	CM00M001P1YG8088.9
	101.6		4						CM00M001P1YG8101.6

Ölçü Tablosu Dimension Table L1	L2	H1	H2	S min.	Sipariş Kodu Order Code
28	9.5	13.5	27	0.4	CD28M003P1YG0006.0
					CD28M003P1YG0006.4
					CD28M003P1YG0008.0
					CD28M003P1YG0009.5
					CD28M003P1YG0010.0
					CD28M003P1YG0012.0
36	20	13.5	27	0.4	CD28M003P1YG1006.0
					CD28M003P1YG1006.4
					CD28M003P1YG1008.0
					CD28M003P1YG1009.5
					CD28M003P1YG1010.0
					CD28M003P1YG1012.0
42	26	16.5	33	0.6	CD28M003P1YG2012.7
					CD28M003P1YG2013.5
					CD28M003P1YG2014.0
					CD28M003P1YG2015.0
					CD28M003P1YG2016.0
					CD28M003P1YG2017.2
					CD28M003P1YG2018.0
50	33	18	36	0.6	CD28M003P1YG3019.0
					CD28M003P1YG3020.0
					CD28M003P1YG3021.3
					CD28M003P1YG3022.0
					CD28M003P1YG3023.0
					CD28M003P1YG3025.0
					CD28M003P1YG3025.4
59	40	21	42	0.6	CD28M003P1YG4026.9
					CD28M003P1YG4028.0
					CD28M003P1YG4030.0
71	52	29	58	0.8	CD28M003P1YG5032.0
					CD28M003P1YG5033.7
					CD28M003P1YG5035.0
					CD28M003P1YG5038.0
					CD28M003P1YG5040.0
					CD28M003P1YG5042.0
86	66	33	66	0.8	CD28M003P1YG6044.5
					CD28M003P1YG6048.3
					CD28M003P1YG6050.8
121	94	46.5	93	0.8	CD28M003P1YG7057.2
					CD28M003P1YG7060.3
					CD28M003P1YG7063.5
					CD28M003P1YG7070.0
					CD28M003P1YG7073.0
					CD28M003P1YG7076.1
147	120	59	118	0.8	CD28M003P1YG8088.9
					CD28M003P1YG8101.6

Metal + Kaplama Tipi Metal + Surface Finishing		Gövde Malzemesi Clamp Body Material	
0	Kaplamasız / Uncoated	A	Alüminyum / Aluminum
1	Fosfat / Phosphated / Fe/Znph	N	Polyamid / Polyamide
3	Galvaniz / Galvanized / Fe/Zn 8C Cr3-B	T	TPE
4	CrNi 304 AISI 304	P	Polipropilen / Polypropylene
6	CrNi 316 AISI 316		
9	Çinko Nikel / Zinc Nickel Fe/ZnNi		

Farklı malzeme talepleriniz için lütfen LMC Makina'ya danışınız.

For different material request please consult LMC Makina.

Gövde + Cıvata + Üstlük
Clamp Body + Bolt + Cover Plate **3**

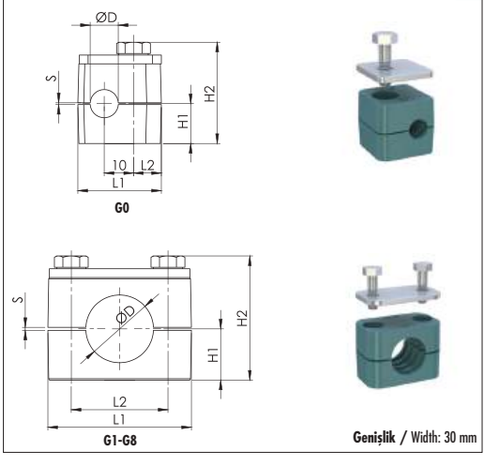

Genişlik / Width: 30 mm

Çift Plakalı Kelepçe
Double Plated Clamp **4**

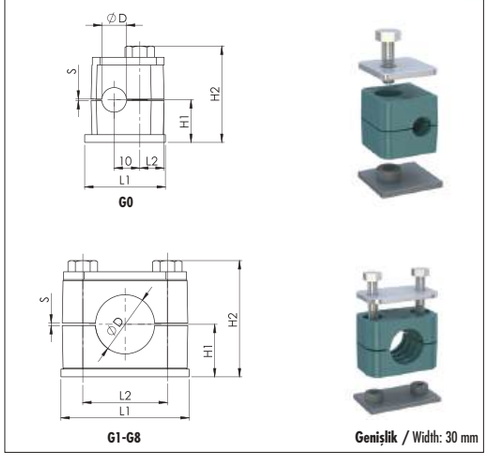

Genişlik / Width: 30 mm

C	D	6	8	M	1	3	0	P	1	Y	G	1	X	X	X	.	X
					Üstlük Cover Plate	Üstlük Kaplama Tipi Cover Plate Finishing	Altlık Kaplama Tipi Weld Plate Finishing	Gövde Malzemesi Clamp Body Material		Gövde Renk Clamp Body Colour		Grup Group			Ölçü Size		

C	M	4	0	M	1	3	1	P	1	Y	G	1	X	X	X	.	X
					Üstlük Cover Plate	Üstlük Kaplama Tipi Cover Plate Finishing	Altlık Kaplama Tipi Weld Plate Finishing	Gövde Malzemesi Clamp Body Material		Gövde Renk Clamp Body Colour		Grup Group			Ölçü Size		

Grup Group	Dış Çap (ØD) O.D. of Pipe / Tube/Hose mm	Anma Çapı (R) Boru Diş Nominal Bore Pipe inch	Dış Çap (ØD) O.D. of Pipe / Tube/Hose inch	Ölçü Tablosu Dimension Table L1	L2	H1	H2	S min.	Sipariş Kodu Order Code
G0	6			28	9.5	13.5	34	0.4	CD68M130P1YG0006.0
	6.4		1/4						CD68M130P1YG0006.4
	8		5/16						CD68M130P1YG0008.0
	9.5		3/8						CD68M130P1YG0009.5
	10	R 1/8							CD68M130P1YG0010.0
	12								CD68M130P1YG0012.0
G1	6			36	20	13.5	34	0.4	CD68M130P1YG1006.0
	6.4		1/4						CD68M130P1YG1006.4
	8		5/16						CD68M130P1YG1008.0
	9.5		3/8						CD68M130P1YG1009.5
	10	R 1/8							CD68M130P1YG1010.0
	12								CD68M130P1YG1012.0
G2	12.7		1/2	42	26	16.5	40	0.6	CD68M130P1YG2012.7
	13.5	R 1/4							CD68M130P1YG2013.5
	14								CD68M130P1YG2014.0
	15								CD68M130P1YG2015.0
	16		5/8						CD68M130P1YG2016.0
	17.2	R 3/8							CD68M130P1YG2017.2
	18								CD68M130P1YG2018.0
G3	19		3/4	50	33	18	43	0.6	CD68M130P1YG3019.0
	20								CD68M130P1YG3020.0
	21.3	R 1/2							CD68M130P1YG3021.3
	22		7/8						CD68M130P1YG3022.0
	23								CD68M130P1YG3023.0
	25								CD68M130P1YG3025.0
	25.4		1						CD68M130P1YG3025.4
G4	26.9	R 3/4		59	40	21	49	0.6	CD68M130P1YG4026.9
	28								CD68M130P1YG4028.0
	30								CD68M130P1YG4030.0
G5	32		1 1/4	71	52	29	65	0.8	CD68M130P1YG5032.0
	33.7	R 1							CD68M130P1YG5033.7
	35								CD68M130P1YG5035.0
	38		1 1/2						CD68M130P1YG5038.0
	40								CD68M130P1YG5040.0
	42	R 1 1/4							CD68M130P1YG5042.0
G6	44.5		1 3/4	86	66	33	73	0.8	CD68M130P1YG6044.5
	48.3	R 1 1/2							CD68M130P1YG6048.3
	50.8		2						CD68M130P1YG6050.8
G7	57.2		2 1/4	121	94	46.5	102	0.8	CD68M130P1YG7057.2
	60.3	R 2							CD68M130P1YG7060.3
	63.5		2 1/2						CD68M130P1YG7063.5
	70		2 3/4						CD68M130P1YG7070.0
	73								CD68M130P1YG7073.0
	76.1	R 2 1/2	3						CD68M130P1YG7076.1
G8	88.9	R 3	3 1/2	147	120	59	127	0.8	CD68M130P1YG8088.9
	101.6		4						CD68M130P1YG8101.6

Ölçü Tablosu Dimension Table L1	L2	H1	H2	S min.	Sipariş Kodu Order Code
31.5	9.5	16.5	37	0.4	CM40M131P1YG0006.0
					CM40M131P1YG0006.4
					CM40M131P1YG0008.0
					CM40M131P1YG0009.5
					CM40M131P1YG0010.0
					CM40M131P1YG0012.0
36	20	16.5	37	0.4	CM40M131P1YG1006.0
					CM40M131P1YG1006.4
					CM40M131P1YG1008.0
					CM40M131P1YG1009.5
					CM40M131P1YG1010.0
					CM40M131P1YG1012.0
42	26	19.5	43	0.6	CM40M131P1YG2012.7
					CM40M131P1YG2013.5
					CM40M131P1YG2014.0
					CM40M131P1YG2015.0
					CM40M131P1YG2016.0
					CM40M131P1YG2017.2
					CM40M131P1YG2018.0
50	33	21	46	0.6	CM40M131P1YG3019.0
					CM40M131P1YG3020.0
					CM40M131P1YG3021.3
					CM40M131P1YG3022.0
					CM40M131P1YG3023.0
					CM40M131P1YG3025.0
					CM40M131P1YG3025.4
60	40	24	52	0.6	CM40M131P1YG4026.9
					CM40M131P1YG4028.0
					CM40M131P1YG4030.0
71	52	32	68	0.8	CM40M131P1YG5032.0
					CM40M131P1YG5033.7
					CM40M131P1YG5035.0
					CM40M131P1YG5038.0
					CM40M131P1YG5040.0
					CM40M131P1YG5042.0
86	66	36	76	0.8	CM40M131P1YG6044.5
					CM40M131P1YG6048.3
					CM40M131P1YG6050.8
122	94	51.5	107	0.8	CM40M131P1YG7057.2
					CM40M131P1YG7060.3
					CM40M131P1YG7063.5
					CM40M131P1YG7070.0
					CM40M131P1YG7073.0
					CM40M131P1YG7076.1
148	120	64	132	0.8	CM40M131P1YG8088.9
					CM40M131P1YG8101.6

Metal + Kaplama Tipi Metal + Surface Finishing		Gövde Malzemesi Clamp Body Material	
0	Kaplamasız / Uncoated	A	Alüminyum / Aluminum
1	Fosfat / Phosphated / Fe/Znph	N	Polyamid / Polyamide
3	Galvaniz / Galvanized / Fe/Zn 8C Cr3-B	T	TPE
4	CrNi 304 AISI 304	P	Polipropilen / Polypropylene
6	CrNi 316 AISI 316		
9	Çinko Nikel / Zinc Nickel Fe/ZnNi		

Montaj Delikli Kelepçe 5
Complete Clamp with Elongated Weld Plate

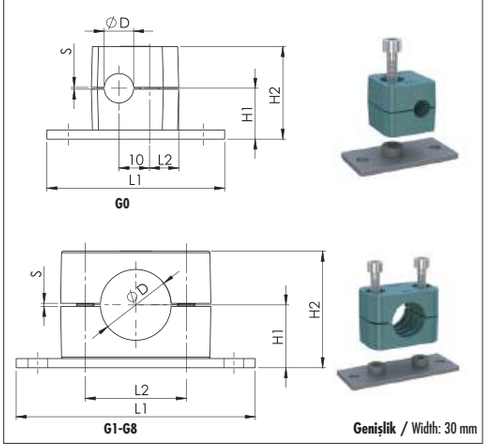

Genişlik / Width: 30 mm

Çift Plakalı Montaj Delikli Kelepçe 6
Double Plated Clamp with Elongated Weld Plate

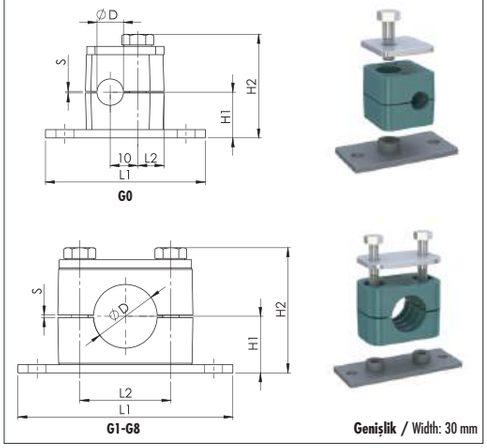

Genişlik / Width: 30 mm

Farklı malzeme talepleriniz için lütfen LMC Makina'ya danışınız.

For different material request please consult LMC Makina.

C M 0 1 M 0 0 1 P 1 Y G 1 X X X . X

- **Üstlük** / Cover Plate
- **Üstlük Kaplama Tipi** / Cover Plate Finishing
- **Altlık Kaplama Tipi** / Weld Plate Finishing
- **Gövde Malzemesi** / Clamp Body Material
- **Gövde Renk** / Clamp Body Colour
- **Grup** / Group
- **Ölçü** / Size

C M 4 1 M 1 3 1 P 1 Y G 1 X X X . X

- **Üstlük** / Cover Plate
- **Üstlük Kaplama Tipi** / Cover Plate Finishing
- **Altlık Kaplama Tipi** / Weld Plate Finishing
- **Gövde Malzemesi** / Clamp Body Material
- **Gövde Renk** / Clamp Body Colour
- **Grup** / Group
- **Ölçü** / Size

Grup Group	Dış Çap (ØD) O.D. of Pipe / Tube/Hose mm	Anma Çapı (R) Boru Diş Nominal Bore Pipe inch	Dış Çap (ØD) O.D. of Pipe / Tube/Hose inch	Ölçü Tablosu Dimension Table L1	L2	H1	H2	S min.	Sipariş Kodu Order Code
G0	6			58	9.5	16.5	30	0.4	CM01M001P1YG0006.0
	6.4		1/4						CM01M001P1YG0006.4
	8		5/16						CM01M001P1YG0008.0
	9.5		3/8						CM01M001P1YG0009.5
	10	R 1/8							CM01M001P1YG0010.0
	12								CM01M001P1YG0012.0
G1	6			64	20	16.5	30	0.4	CM01M001P1YG1006.0
	6.4		1/4						CM01M001P1YG1006.4
	8		5/16						CM01M001P1YG1008.0
	9.5		3/8						CM01M001P1YG1009.5
	10	R 1/8							CM01M001P1YG1010.0
	12								CM01M001P1YG1012.0
G2	12.7		1/2	70	26	19.5	36	0.6	CM01M001P1YG2012.7
	13.5	R 1/4							CM01M001P1YG2013.5
	14								CM01M001P1YG2014.0
	15								CM01M001P1YG2015.0
	16		5/8						CM01M001P1YG2016.0
	17.2	R 3/8							CM01M001P1YG2017.2
	18								CM01M001P1YG2018.0
G3	19		3/4	78	33	21	39	0.6	CM01M001P1YG3019.0
	20								CM01M001P1YG3020.0
	21.3	R 1/2							CM01M001P1YG3021.3
	22		7/8						CM01M001P1YG3022.0
	23								CM01M001P1YG3023.0
	25								CM01M001P1YG3025.0
	25.4		1						CM01M001P1YG3025.4
G4	26.9	R 3/4		87	40	24	45	0.6	CM01M001P1YG4026.9
	28								CM01M001P1YG4028.0
	30								CM01M001P1YG4030.0
G5	32		1 1/4	100	52	32	61	0.8	CM01M001P1YG5032.0
	33.7	R 1							CM01M001P1YG5033.7
	35								CM01M001P1YG5035.0
	38		1 1/2						CM01M001P1YG5038.0
	40								CM01M001P1YG5040.0
	42	R 1 1/4							CM01M001P1YG5042.0
G6	44.5		1 3/4	115	66	36	69	0.8	CM01M001P1YG6044.5
	48.3	R 1 1/2							CM01M001P1YG6048.3
	50.8		2						CM01M001P1YG6050.8
G7	57.2		2 1/4	150	94	51.5	98	0.8	CM01M001P1YG7057.2
	60.3	R 2							CM01M001P1YG7060.3
	63.5		2 1/2						CM01M001P1YG7063.5
	70		2 3/4						CM01M001P1YG7070.0
	73								CM01M001P1YG7073.0
	76.1	R 2 1/2	3						CM01M001P1YG7076.1
G8	88.9	R 3	3 1/2	178	120	64	123	0.8	CM01M001P1YG8088.9
	101.6		4						CM01M001P1YG8101.6

Grup Group	Dış Çap (ØD) O.D. of Pipe / Tube/Hose mm	Anma Çapı (R) Boru Diş Nominal Bore Pipe inch	Dış Çap (ØD) O.D. of Pipe / Tube/Hose inch	Ölçü Tablosu Dimension Table L1	L2	H1	H2	S min.	Sipariş Kodu Order Code
G0	6			58	9.5	16.5	37	0.4	CM41M131P1YG0006.0
	6.4		1/4						CM41M131P1YG0006.4
	8		5/16						CM41M131P1YG0008.0
	9.5		3/8						CM41M131P1YG0009.5
	10	R 1/8							CM41M131P1YG0010.0
	12								CM41M131P1YG0012.0
G1	6			64	20	16.5	37	0.4	CM41M131P1YG1006.0
	6.4		1/4						CM41M131P1YG1006.4
	8		5/16						CM41M131P1YG1008.0
	9.5		3/8						CM41M131P1YG1009.5
	10	R 1/8							CM41M131P1YG1010.0
	12								CM41M131P1YG1012.0
G2	12.7		1/2	70	26	19.5	43	0.6	CM41M131P1YG2012.7
	13.5	R 1/4							CM41M131P1YG2013.5
	14								CM41M131P1YG2014.0
	15								CM41M131P1YG2015.0
	16		5/8						CM41M131P1YG2016.0
	17.2	R 3/8							CM41M131P1YG2017.2
	18								CM41M131P1YG2018.0
G3	19		3/4	78	33	21	46	0.6	CM41M131P1YG3019.0
	20								CM41M131P1YG3020.0
	21.3	R 1/2							CM41M131P1YG3021.3
	22		7/8						CM41M131P1YG3022.0
	23								CM41M131P1YG3023.0
	25								CM41M131P1YG3025.0
	25.4		1						CM41M131P1YG3025.4
G4	26.9	R 3/4		87	40	24	52	0.6	CM41M131P1YG4026.9
	28								CM41M131P1YG4028.0
	30								CM41M131P1YG4030.0
G5	32		1 1/4	100	52	32	68	0.8	CM41M131P1YG5032.0
	33.7	R 1							CM41M131P1YG5033.7
	35								CM41M131P1YG5035.0
	38		1 1/2						CM41M131P1YG5038.0
	40								CM41M131P1YG5040.0
	42	R 1 1/4							CM41M131P1YG5042.0
G6	44.5		1 3/4	115	66	36	76	0.8	CM41M131P1YG6044.5
	48.3	R 1 1/2							CM41M131P1YG6048.3
	50.8		2						CM41M131P1YG6050.8
G7	57.2		2 1/4	150	94	51.5	107	0.8	CM41M131P1YG7057.2
	60.3	R 2							CM41M131P1YG7060.3
	63.5		2 1/2						CM41M131P1YG7063.5
	70		2 3/4						CM41M131P1YG7070.0
	73								CM41M131P1YG7073.0
	76.1	R 2 1/2	3						CM41M131P1YG7076.1
G8	88.9	R 3	3 1/2	178	120	64	132	0.8	CM41M131P1YG8088.9
	101.6		4						CM41M131P1YG8101.6

Metal + Kaplama Tipi Metal + Surface Finishing		Gövde Malzemesi Clamp Body Material	
0	Kaplamasız / Uncoated	A	Alüminyum / Aluminum
1	Fosfat / Phosphated / Fe/Znph	N	Polyamid / Polyamide
3	Galvaniz / Galvanized / Fe/Zn 8C Cr3-B	T	TPE
4	CrNi 304 AISI 304	P	Polipropilen / Polypropylene
6	CrNi 316 AISI 316		
9	Çinko Nikel / Zinc Nickel Fe/ZnNi		

Farklı malzeme talepleriniz için lütfen LMC Makina'ya danışınız.

For different material request please consult LMC Makina.

Raya Uyumlu Kelepçe
Clamp with Rail Nut **7**

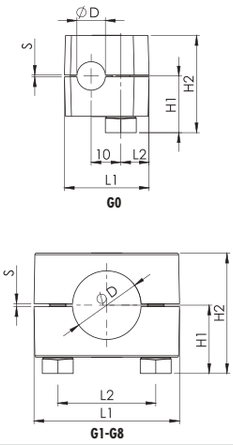

Genişlik / Width: 30 mm

Raya Uyumlu Üstlüklü Kelepçe
Clamp with Cover Plate + Rail Nut **8**

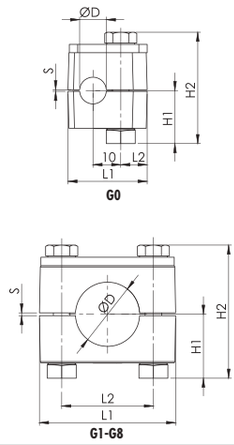

Genişlik / Width: 30 mm

C	D	3	0	M	0	0	3	P	1	Y	G	0	X	X	X	.	X
					Üstlük Cover Plate	Üstlük Kaplama Tipi Cover Plate Finishing	Altlık Kaplama Tipi Weld Plate Finishing	Gövde Malzemesi Clamp Body Material		Gövde Renk Clamp Body Colour	Grup Group		Ölçü Size				

C	D	7	0	M	1	3	3	P	1	Y	G	0	X	X	X	.	X
					Üstlük Cover Plate	Üstlük Kaplama Tipi Cover Plate Finishing	Altlık Kaplama Tipi Weld Plate Finishing	Gövde Malzemesi Clamp Body Material		Gövde Renk Clamp Body Colour	Grup Group		Ölçü Size				

Grup Group	Dış Çap (ØD) O.D. of Pipe / Tube/Hose mm	Anma Çapı (R) Boru Diş Nominal Bore Pipe inch	Dış Çap (ØD) O.D. of Pipe / Tube/Hose inch	Ölçü Tablosu Dimension Table L1	L2	H1	H2	S min.	Sipariş Kodu Order Code	Ölçü Tablosu Dimension Table L1	L2	H1	H2	S min.	Sipariş Kodu Order Code
G0	6			28	9.5	20.5	34	0.4	CD30M003P1YG0006.0	28	9.5	20.5	41	0.4	CD70M133P1YG0006.0
	6.4		1/4						CD30M003P1YG0006.4						CD70M133P1YG0006.4
	8		5/16						CD30M003P1YG0008.0						CD70M133P1YG0008.0
	9.5		3/8						CD30M003P1YG0009.5						CD70M133P1YG0009.5
	10	R 1/8							CD30M003P1YG0010.0						CD70M133P1YG0010.0
	12								CD30M003P1YG0012.0						CD70M133P1YG0012.0
G1	6			36	20	20.5	34	0.4	CD30M003P1YG1006.0	36	20	20.5	41	0.4	CD70M133P1YG1006.0
	6.4		1/4						CD30M003P1YG1006.4						CD70M133P1YG1006.4
	8		5/16						CD30M003P1YG1008.0						CD70M133P1YG1008.0
	9.5		3/8						CD30M003P1YG1009.5						CD70M133P1YG1009.5
	10	R 1/8							CD30M003P1YG1010.0						CD70M133P1YG1010.0
	12								CD30M003P1YG1012.0						CD70M133P1YG1012.0
G2	12.7		1/2	42	26	23.5	40	0.6	CD30M003P1YG2012.7	42	26	23.5	47	0.6	CD70M133P1YG2012.7
	13.5	R 1/4							CD30M003P1YG2013.5						CD70M133P1YG2013.5
	14								CD30M003P1YG2014.0						CD70M133P1YG2014.0
	15								CD30M003P1YG2015.0						CD70M133P1YG2015.0
	16		5/8						CD30M003P1YG2016.0						CD70M133P1YG2016.0
	17.2	R 3/8							CD30M003P1YG2017.2						CD70M133P1YG2017.2
	18								CD30M003P1YG2018.0						CD70M133P1YG2018.0
G3	19		3/4	50	33	25	43	0.6	CD30M003P1YG3019.0	50	33	25	50	0.6	CD70M133P1YG3019.0
	20								CD30M003P1YG3020.0						CD70M133P1YG3020.0
	21.3	R 1/2							CD30M003P1YG3021.3						CD70M133P1YG3021.3
	22		7/8						CD30M003P1YG3022.0						CD70M133P1YG3022.0
	23								CD30M003P1YG3023.0						CD70M133P1YG3023.0
	25								CD30M003P1YG3025.0						CD70M133P1YG3025.0
	25.4		1						CD30M003P1YG3025.4						CD70M133P1YG3025.4
G4	26.9	R 3/4		59	40	28	49	0.6	CD30M003P1YG4026.9	59	40	28	56	0.6	CD70M133P1YG4026.9
	28								CD30M003P1YG4028.0						CD70M133P1YG4028.0
	30								CD30M003P1YG4030.0						CD70M133P1YG4030.0
G5	32		1 1/4	71	52	35	65	0.8	CD30M003P1YG5032.0	71	52	35	72	0.8	CD70M133P1YG5032.0
	33.7	R 1							CD30M003P1YG5033.7						CD70M133P1YG5033.7
	35								CD30M003P1YG5035.0						CD70M133P1YG5035.0
	38		1 1/2						CD30M003P1YG5038.0						CD70M133P1YG5038.0
	40								CD30M003P1YG5040.0						CD70M133P1YG5040.0
	42	R 1 1/4							CD30M003P1YG5042.0						CD70M133P1YG5042.0
G6	44.5		1 3/4	86	66	40	73	0.8	CD30M003P1YG6044.5	86	66	40	80	0.8	CD70M133P1YG6044.5
	48.3	R 1 1/2							CD30M003P1YG6048.3						CD70M133P1YG6048.3
	50.8		2						CD30M003P1YG6050.8						CD70M133P1YG6050.8
G7	57.2		2 1/4	121	94	53.5	100	0.8	CD30M003P1YG7057.2	121	94	53.5	109	0.8	CD70M133P1YG7057.2
	60.3	R 2							CD30M003P1YG7060.3						CD70M133P1YG7060.3
	63.5		2 1/2						CD30M003P1YG7063.5						CD70M133P1YG7063.5
	70		2 3/4						CD30M003P1YG7070.0						CD70M133P1YG7070.0
	73								CD30M003P1YG7073.0						CD70M133P1YG7073.0
	76.1	R 2 1/2	3						CD30M003P1YG7076.1						CD70M133P1YG7076.1
G8	88.9	R 3	3 1/2	147	120	66	125	0.8	CD30M003P1YG8088.9	147	120	66	134	0.8	CD70M133P1YG8088.9
	101.6		4						CD30M003P1YG8101.6						CD70M133P1YG8101.6

Metal + Kaplama Tipi Metal + Surface Finishing		Gövde Malzemesi Clamp Body Material	
0	Kaplamasız / Uncoated	A	Alüminyum / Aluminum
1	Fosfat / Phosphated / Fe/Znph	N	Polyamid / Polyamide
3	Galvaniz / Galvanized / Fe/Zn 8C Cr3-B	T	TPE
4	CrNi 304 AISI 304	P	Polipropilen / Polypropylene
6	CrNi 316 AISI 316		
9	Çinko Nikel / Zinc Nickel Fe/ZnNi		

Farklı malzeme talepleriniz için lütfen LMC Makina'ya danışınız.

For different material request please consult LMC Makina.

Kelepçe Üst Takım / Clamp Upper Set — 9

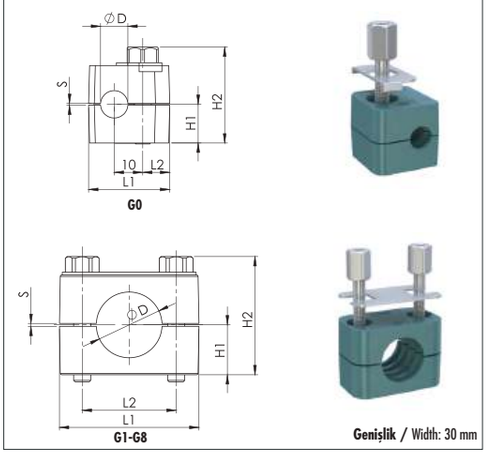

Genişlik / Width: 30 mm

Kelepçe Gövdesi / Clamp Body — 10

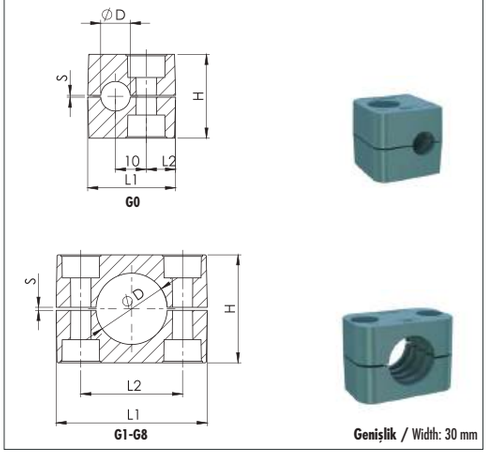

Genişlik / Width: 30 mm

C	D	a	a	M	6	3	0	P	1	Y	G	0	X	X	X	.	X
								Üstlük Cover Plate	**Üstlük Kaplama Tipi** Cover Plate Finishing	**Altlık Kaplama Tipi** Weld Plate Finishing	**Gövde Malzemesi** Clamp Body Material	**Gövde Renk** Clamp Body Colour	**Grup** Group				**Ölçü** Size

C	2	P	1	Y	G	0	X	X	X	.	X
		Gövde Malzemesi Clamp Body Material	**Gövde Tipi** Clamp Body Design	**Gövde Renk** Clamp Body Colour	**Grup** Group					**Ölçü** Size	

Grup Group	Dış Çap (ØD) O.D. of Pipe / Tube/Hose mm	Anma Çapı (R) Boru Diş Nominal Bore Pipe inch	Dış Çap (ØD) O.D. of Pipe / Tube/Hose inch	Ölçü Tablosu Dimension Table L1	L2	H1	H2	S min.	Sipariş Kodu Order Code	Ölçü Tablosu Dimension Table L1	L2	H	S min.	Sipariş Kodu Order Code
G0	6			28	9.5	13.5	33.5	0.4	CDaaM630P1YG0006.0	28	9.5	27	0.4	C2P1YG0006.0
	6.4		1/4						CDaaM630P1YG0006.4					C2P1YG0006.4
	8		5/16						CDaaM630P1YG0008.0					C2P1YG0008.0
	9.5		3/8						CDaaM630P1YG0009.5					C2P1YG0009.5
	10	R 1/8							CDaaM630P1YG0010.0					C2P1YG0010.0
	12								CDaaM630P1YG0012.0					C2P1YG0012.0
G1	6			36	20	13.5	33.5	0.4	CDaaM630P1YG1006.0	36	20	27	0.4	C2P1YG1006.0
	6.4		1/4						CDaaM630P1YG1006.4					C2P1YG1006.4
	8		5/16						CDaaM630P1YG1008.0					C2P1YG1008.0
	9.5		3/8						CDaaM630P1YG1009.5					C2P1YG1009.5
	10	R 1/8							CDaaM630P1YG1010.0					C2P1YG1010.0
	12								CDaaM630P1YG1012.0					C2P1YG1012.0
G2	12.7		1/2	42	26	16.5	39.5	0.6	CDaaM630P1YG2012.7	42	26	33	0.6	C2P1YG2012.7
	13.5	R 1/4							CDaaM630P1YG2013.5					C2P1YG2013.5
	14								CDaaM630P1YG2014.0					C2P1YG2014.0
	15								CDaaM630P1YG2015.0					C2P1YG2015.0
	16		5/8						CDaaM630P1YG2016.0					C2P1YG2016.0
	17.2	R 3/8							CDaaM630P1YG2017.2					C2P1YG2017.2
	18								CDaaM630P1YG2018.0					C2P1YG2018.0
G3	19		3/4	50	33	18	40.5	0.6	CDaaM630P1YG3019.0	50	33	36	0.6	C2P1YG3019.0
	20								CDaaM630P1YG3020.0					C2P1YG3020.0
	21.3	R 1/2							CDaaM630P1YG3021.3					C2P1YG3021.3
	22		7/8						CDaaM630P1YG3022.0					C2P1YG3022.0
	23								CDaaM630P1YG3023.0					C2P1YG3023.0
	25								CDaaM630P1YG3025.0					C2P1YG3025.0
	25.4		1						CDaaM630P1YG3025.4					C2P1YG3025.4
G4	26.9	R 3/4		59	40	21	48.5	0.6	CDaaM630P1YG4026.9	59	40	42	0.6	C2P1YG4026.9
	28								CDaaM630P1YG4028.0					C2P1YG4028.0
	30								CDaaM630P1YG4030.0					C2P1YG4030.0
G5	32		1 1/4	71	52	26	64.5	0.8	CDaaM630P1YG5032.0	71	52	58	0.8	C2P1YG5032.0
	33.7	R 1							CDaaM630P1YG5033.7					C2P1YG5033.7
	35								CDaaM630P1YG5035.0					C2P1YG5035.0
	38		1 1/2						CDaaM630P1YG5038.0					C2P1YG5038.0
	40								CDaaM630P1YG5040.0					C2P1YG5040.0
	42	R 1 1/4							CDaaM630P1YG5042.0					C2P1YG5042.0
G6	44.5		1 3/4	86	66	33	72.5	0.8	CDaaM630P1YG6044.5	86	66	66	0.8	C2P1YG6044.5
	48.3	R 1 1/2							CDaaM630P1YG6048.3					C2P1YG6048.3
	50.8		2						CDaaM630P1YG6050.8					C2P1YG6050.8
G7	57.2		2 1/4	121	94	46.5	100.5	0.8	CDaaM630P1YG7057.2	121	94	93	0.8	C2P1YG7057.2
	60.3	R 2							CDaaM630P1YG7060.3					C2P1YG7060.3
	63.5		2 1/2						CDaaM630P1YG7063.5					C2P1YG7063.5
	70		2 3/4						CDaaM630P1YG7070.0					C2P1YG7070.0
	73								CDaaM630P1YG7073.0					C2P1YG7073.0
	76.1	R 2 1/2	3						CDaaM630P1YG7076.1					C2P1YG7076.1
G8	88.9	R 3	3 1/2	147	120	59	119.5	0.8	CDaaM630P1YG8088.9	147	120	118	0.8	C2P1YG8088.9
	101.6		4						CDaaM630P1YG8101.6					C2P1YG8101.6

Gövde Malzemesi Clamp Body Material		Metal + Kaplama Tipi Metal + Surface Finishing		Vida Tipi Thread Type	
A	Alüminyum / Aluminum	0	Kaplamasız / Uncoated	C	UNC
N	Polyamid / Polyamide	1	Fosfat / Phosphated / Fe/Znph	F	UNF
T	TPE	3	Galvaniz / Galvanized / Fe/Zn 8C Cr3-B	M	Metrik / Metric
P	Polipropilen / Polypropylene	4	CrNi 304 AISI 304	W	Whitworth
		6	CrNi 316 AISI 316		
		9	Çinko Nikel / Zinc Nickel Fe/ZnNi		

Farklı malzeme talepleriniz için lütfen LMC Makina'ya danışınız.

For different material request please consult LMC Makina.

Alt Plaka
Weld Plate **11**

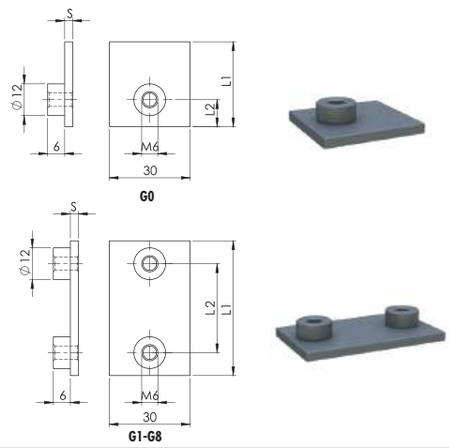

Montaj Delikli Alt Plaka
Elongated Weld Plate **12**

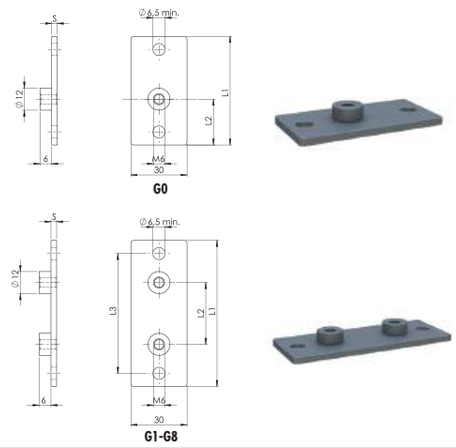

C	A	0	0	M	1	G	0
				Vida Tipi Thread Type	Metal + Kaplama Tipi Metal + Surface Finishing	Grup Group	

C	A	0	1	M	1	G	0
				Vida Tipi Thread Type	Metal + Kaplama Tipi Metal + Surface Finishing	Grup Group	

Grup Group	Dış Çap (ØD) O.D. of Pipe / Tube/Hose mm	Anma Çapı (R) Boru Diş Nominal Bore Pipe inch	Dış Çap (ØD) O.D. of Pipe / Tube/Hose inch	Ölçü Tablosu Dimension Table L1	L2	S	G	Sipariş Kodu Order Code	Ölçü Tablosu Dimension Table L1	L2	L3	S	G	Sipariş Kodu Order Code
G0	6			31.5	10.5	3	M6 1/4-20 UNC	CA00M1G0	58	24.5	44	3	M6 1/4-20 UNC	CA01M1G0
	6.4		1/4											
	8		5/16											
	9.5		3/8											
	10	R 1/8												
	12													
G1	6			36	20	3	M6 1/4-20 UNC	CA00M1G1	64	20	50	3	M6 1/4-20 UNC	CA01M3G1
	6.4		1/4											
	8		5/16											
	9.5		3/8											
	10	R 1/8												
	12													
G2	12.7		1/2	42	26	3	M6 1/4-20 UNC	CA00M1G2	70	26	56	3	M6 1/4-20 UNC	CA01M1G2
	13.5	R 1/4												
	14													
	15													
	16		5/8											
	17.2	R 3/8												
	18													
G3	19		3/4	50	33	3	M6 1/4-20 UNC	CA00M1G3	78	33	64	3	M6 1/4-20 UNC	CA01M1G3
	20													
	21.3	R 1/2												
	22		7/8											
	23													
	25													
	25.4		1											
G4	26.9	R 3/4		60	40	3	M6 1/4-20 UNC	CA00M1G4	87	40	73	3	M6 1/4-20 UNC	CA01M1G4
	28													
	30													
G5	32		1 1/4	71	52	3	M6 1/4-20 UNC	CA00M1G5	100	52	86	3	M6 1/4-20 UNC	CA01M1G5
	33.7	R 1												
	35													
	38		1 1/2											
	40													
	42	R 1 1/4												
G6	44.5		1 3/4	88	66	3	M6 1/4-20 UNC	CA00M1G6	115	66	100	3	M6 1/4-20 UNC	CA01M1G6
	48.3	R 1 1/2												
	50.8		2											
G7	57.2		2 1/4	122	94	5	M6 1/4-20 UNC	CA00M1G7	150	94	136	5	M6 1/4-20 UNC	CA01M1G7
	60.3	R 2												
	63.5		2 1/2											
	70		2 3/4											
	73													
	76.1	R 2 1/2	3											
G8	88.9	R 3	3 1/2	148	120	5	M6 1/4-20 UNC	CA00M1G8	178	120	162	5	M6 1/4-20 UNC	CA01M1G8
	101.6		4											

Metal + Kaplama Tipi Metal + Surface Finishing		Vida Tipi Thread Type	
0	Kaplamasız / Uncoated	C	**UNC**
1	Fosfat / Phosphated / Fe/Znph	F	**UNF**
3	Galvaniz / Galvanized / Fe/Zn 8C Cr3-B	M	Metrik / Metric
4	CrNi 304 AISI 304	W	**Whitworth**
6	CrNi 316 AISI 316		
9	Çinko Nikel / Zinc Nickel Fe/ZnNi		

Farklı malzeme talepleriniz için lütfen LMC Makina'ya danışınız.

For different material request please consult LMC Makina.

İkili Alt Plaka
Twin Weld Plate **13**

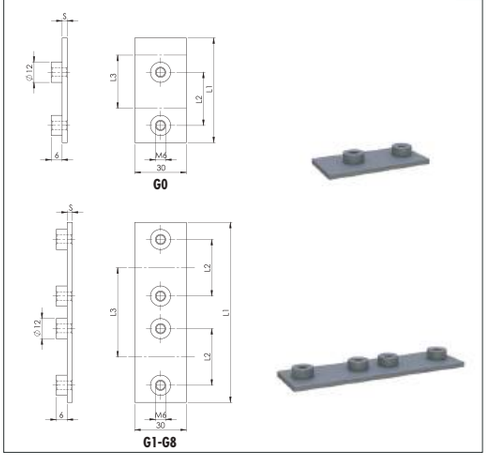

Çoklu Alt Plaka
Group Weld Plate **14**

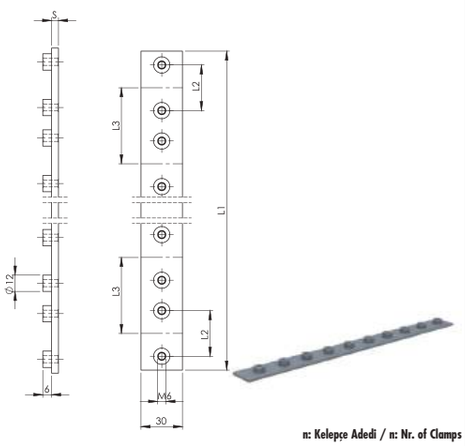

C	A	0	2	M	1	G	0
				Vida Tipi Thread Type	Metal + Kaplama Tipi Metal + Surface Finishing	Grup Group	

C	A	1	0	M	1	G	0
				Vida Tipi Thread Type	Metal + Kaplama Tipi Metal + Surface Finishing	Grup Group	

Grup Group	Dış Çap (ØD) O.D. of Pipe / Tube/Hose mm	Anma Çapı (R) Boru Diş Nominal Bore Pipe inch	Dış Çap (ØD) O.D. of Pipe / Tube/Hose inch
G0	6		
	6.4		1/4
	8		5/16
	9.5		3/8
	10	R 1/8	
	12		
G1	6		
	6.4		1/4
	8		5/16
	9.5		3/8
	10	R 1/8	
	12		
G2	12.7		1/2
	13.5	R 1/4	
	14		
	15		
	16		5/8
	17.2	R 3/8	
	18		
G3	19		3/4
	20		
	21.3	R 1/2	
	22		7/8
	23		
	25		
	25.4		1
	26.9	R 3/4	
G4	28		
	30		
	32		1 1/4
G5	33.7	R 1	
	35		
	38		1 1/2
	40		
	42		
	44.5	R 1 1/4	
G6	48.3		1 3/4
	50.8	R 1 1/2	
			2

Ölçü Tablosu Dimension Table L1	L2	L3	G	Sipariş Kodu Order Code
61	31	31	M6 1/4-20 UNC	CA02M1G0
77	20	37	M6 1/4-20 UNC	CA02M1G1
90	26	44	M6 1/4-20 UNC	CA02M1G2
105	33	52	M6 1/4-20 UNC	CA02M1G3
120	40	60	M6 1/4-20 UNC	CA02M1G4
147	52	75	M6 1/4-20 UNC	CA02M1G5
178	66	90	M6 1/4-20 UNC	CA02M1G6

Ölçü Tablosu Dimension Table L1	L2	L3	n	G	S	Sipariş Kodu Order Code
317	31	31	10	M6 1/4-20 UNC	4	CA10M1G0
373	20	37	10	M6 1/4-20 UNC	4	CA10M1G1
442	26	44	10	M6 1/4-20 UNC	4	CA10M1G2
521	33	52	10	M6 1/4-20 UNC	4	CA05M1G3
300	40	60	5	M6 1/4-20 UNC	4	CA05M1G4
376	52	75	5	M6 1/4-20 UNC	4	CA05M1G5
450	66	90	5	M6 1/4-20 UNC	4	CA05M1G6

Metal + Kaplama Tipi Metal + Surface Finishing		Vida Tipi Thread Type	
0	Kaplamasız / Uncoated	C	UNC
1	Fosfat / Phosphated / Fe/Znph	F	UNF
3	Galvaniz / Galvanized / Fe/Zn 8C Cr3-B	M	Metrik / Metric
4	CrNi 304 AISI 304	W	Whitworth
6	CrNi 316 AISI 316		
9	Çinko Nikel / Zinc Nickel Fe/ZnNi		

Farklı malzeme talepleriniz için lütfen LMC Makina'ya danışınız.

For different material request please consult LMC Makina.

L Altlık
Angled Weld Plate **15**

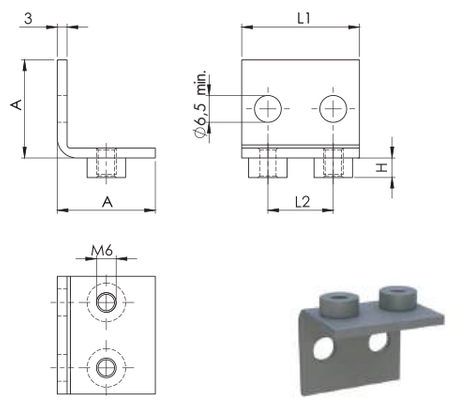

C	A	2	7	M	1	G	0
				Vida Tipi Thread Type	Metal + Kaplama Tipi Metal + Surface Finishing	Grup Group	

Üst Plaka
Cover Plate **16**

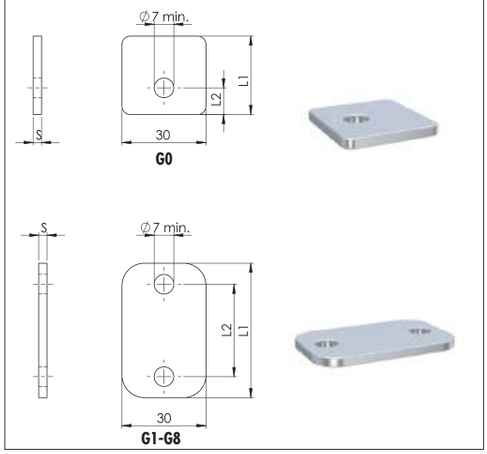

C	U	0	0	T	3	G	0
					Metal + Kaplama Tipi Metal + Surface Finishing	Grup Group	

Grup Group	Dış Çap (ØD) O.D. of Pipe / Tube/Hose mm	Anma Çapı (R) Boru Diş Nominal Bore Pipe inch	Dış Çap (ØD) O.D. of Pipe / Tube/Hose inch	Ölçü Tablosu Dimension Table A	L1	L2	H	Sipariş Kodu Order Code	Ölçü Tablosu Dimension Table L1	L2	S	Sipariş Kodu Order Code
G0	6			30x30	30	14	6	CA27M1G0	28	9.5	3	CU00T3G0
	6.4		1/4									
	8		5/16									
	9.5		3/8									
	10	R 1/8										
	12											
G1	6			30x30	36	20	6	CA27M1G1	34	20	3	CU00T3G1
	6.4		1/4									
	8		5/16									
	9.5		3/8									
	10	R 1/8										
	12											
G2	12.7		1/2	30x30	42	26	6	CA27M1G2	40	26	3	CU00T3G2
	13.5	R 1/4										
	14											
	15											
	16		5/8									
	17.2	R 3/8										
	18											
G3	19		3/4	30x30	50	33	6	CA27M1G3	48	33	3	CU00T3G3
	20											
	21.3	R 1/2										
	22		7/8									
	23											
	25											
	25.4		1									
G4	26.9	R 3/4		30x30	60	40	6	CA27M1G4	57	40	3	CU00T3G4
	28											
	30											
G5	32		1 1/4	30x30	71	52	6	CA27M1G5	70	52	3	CU00T3G5
	33.7	R 1										
	35											
	38		1 1/2									
	40											
	42	R 1 1/4										
G6	44.5		1 3/4	30x30	88	66	6	CA27M1G6	86	66	3	CU00T3G6
	48.3	R 1 1/2										
	50.8		2									
G7	57.2		2 1/4						118	94	5	CU00T3G7
	60.3	R 2										
	63.5		2 1/2									
	70		2 3/4									
	73											
	76.1	R 2 1/2	3									
G8	88.9	R 3	3 1/2						144	120	5	CU00T3G8
	101.6		4									

Metal + Kaplama Tipi Metal + Surface Finishing		Vida Tipi Thread Type	
0	Kaplamasız / Uncoated	C	UNC
3	Galvaniz / Galvanized / Fe/Zn 8C Cr3-B	F	UNF
4	CrNi 304 AISI 304	M	Metrik / Metric
6	CrNi 316 AISI 316	W	Whitworth
9	Çinko Nikel / Zinc Nickel Fe/ZnNi		

Montaj Rayı
Mounting Rail
17

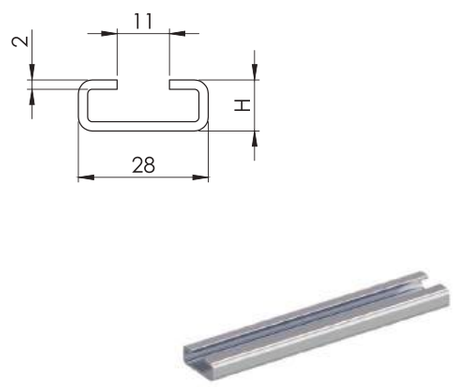

Ray Somunu
Rail Nut
18

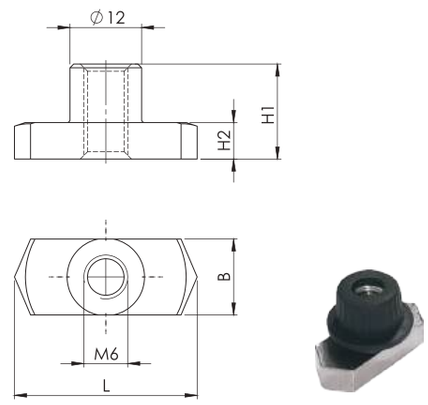

Farklı malzeme talepleriniz için lütfen LMC Makina'ya danışınız.

For different material request please consult LMC Makina.

C	R	Y	0	1	1	2	8	1
			Metal + Kaplama Tipi Metal + Surface Finishing	Ölçü Size				Boy Length

C	R	S	5	M	3	0	0	6
			Tip Type	Vida Tipi Thread Type	Metal + Kaplama Tipi Metal + Surface Finishing		Vida Ölçüsü Screw - Bolt Size	

Grup Group	Dış Çap (ØD) O.D. of Pipe / Tube/Hose mm	Anma Çapı (R) Boru Dış Nominal Bore Pipe inch	Dış Çap (ØD) O.D. of Pipe / Tube/Hose inch
G0	6		
	6.4		1/4
	8		5/16
	9.5		3/8
	10	R 1/8	
	12		
G1	6		
	6.4		1/4
	8		5/16
	9.5		3/8
	10	R 1/8	
	12		
G2	12.7		1/2
	13.5	R 1/4	
	14		
	15		
	16		5/8
	17.2	R 3/8	
	18		
G3	19		3/4
	20		
	21.3	R 1/2	
	22		7/8
	23		
	25		
	25.4		1
G4	26.9	R 3/4	
	28		
	30		
G5	32		1 1/4
	33.7	R 1	
	35		
	38		1 1/2
	40		
	42	R 1 1/4	
G6	44.5		1 3/4
	48.3	R 1 1/2	
	50.8		2
G7	57.2		2 1/4
	60.3	R 2	
	63.5		2 1/2
	70		2 3/4
	73		
	76.1	R 2 1/2	3
G8	88.9	R 3	3 1/2
	101.6		4

Ölçü Tablosu Dimension Table H	Boy / Length	Sipariş Kodu Order Code
11	1 m	CRY011281
11	2 m	CRY011282
14	1 m	CRY014281
14	2 m	CRY014282
30	1 m	CRY030281
30	2 m	CRY030282

Ölçü Tablosu Dimension Table L	B	H1	H2	G	Sipariş Kodu Order Code
25.4	10.4	13	5	M6 1/4-20 UNC	CRS5M3006 CRS5C3008

Metal + Kaplama Tipi Metal + Surface Finishing		Vida Tipi Thread Type	
0	Kaplamasız / Uncoated	C	UNC
3	Galvaniz / Galvanized / Fe/Zn 8C Cr3-B	F	UNF
4	CrNi 304 AISI 304	M	Metrik / Metric
6	CrNi 316 AISI 316	W	Whitworth
9	Çinko Nikel / Zinc Nickel Fe/ZnNi		

Farklı malzeme talepleriniz için lütfen LMC Makina'ya danışınız.

For different material request please consult LMC Makina.

Gömme Başlı Cıvata / Socket Cap Screw — 19

DIN 912 - ISO 4762

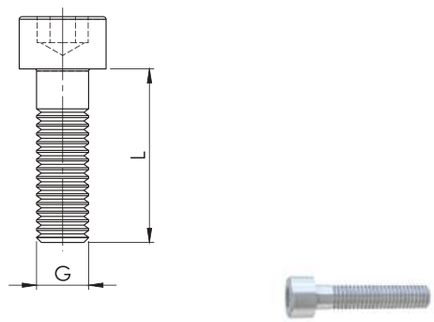

C	C	G	M	3	0	0	6	0	2	0

- M: **Vida Tipi** / Thread Type
- 3: **Metal + Kaplama Tipi** / Metal + Surface Finishing
- 006: **Vida Ölçüsü** / Screw - Bolt Size
- 020: **Cıvata Boyu** / Screw - Bolt Length

Altıköşe Başlı Cıvata / Hexagon Head Bolt — 20

DIN 931 / 933 - ISO 4014

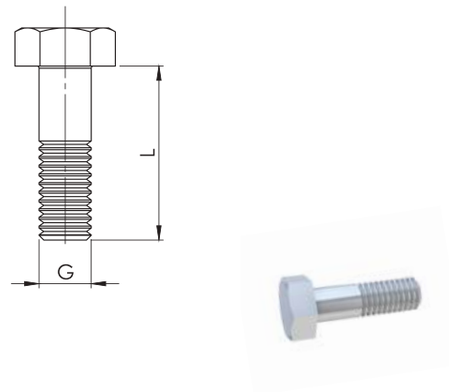

C	C	A	M	3	0	0	6	0	3	0

- M: **Vida Tipi** / Thread Type
- 3: **Metal + Kaplama Tipi** / Metal + Surface Finishing
- 006: **Vida Ölçüsü** / Screw - Bolt Size
- 030: **Cıvata Boyu** / Screw - Bolt Length

Grup Group	Dış Çap (ØD) O.D. of Pipe / Tube/Hose mm	Anma Çapı (R) Boru Diş Nominal Bore Pipe inch	Dış Çap (ØD) O.D. of Pipe / Tube/Hose inch	Ölçü Tablosu Dimension Table GxL	Sipariş Kodu Order Code	Ölçü Tablosu Dimension Table GxL	Sipariş Kodu Order Code
G0	6						
	6.4		1/4				
	8		5/16	M6x20 1/4 - 20 UNC x 3/4	CCGM3006020 CCGC3008020	M6x30 1/4 - 20 UNC x 1 - 1/4	CCAM3006030 CCAC3008030
	9.5		3/8				
	10	R 1/8					
	12						
G1	6						
	6.4		1/4				
	8		5/16	M6x20 1/4 - 20 UNC x 3/4	CCGM3006020 CCGC3008020	M6x30 1/4 - 20 UNC x 1 - 1/4	CCAM3006030 CCAC3008030
	9.5		3/8				
	10	R 1/8					
	12						
G2	12.7		1/2				
	13.5	R 1/4					
	14						
	15			M6x25 1/4 - 20 UNC x 1	CCGM3006025 CCGC3008025	M6x35 1/4 - 20 UNC x 1 - 3/8	CCAM3006035 CCAC3008035
	16		5/8				
	17.2	R 3/8					
	18						
G3	19		3/4				
	20						
	21.3	R 1/2					
	22		7/8	M6x30 1/4 - 20 UNC x 1 - 1/8	CCGM3006030 CCGC3008030	M6x40 1/4 - 20 UNC x 1 - 1/2	CCAM3006040 CCAC3008040
	23						
	25						
	25.4		1				
G4	26.9	R 3/4		M6x35 1/4 - 20 UNC x 1 - 3/8	CCGM3006035 CCGC3008035	M6x45 1/4 - 20 UNC x 1 - 7/8	CCAM3006045 CCAC3008045
	28						
	30						
G5	32		1 1/4				
	33.7	R 1					
	35			M6x50 1/4 - 20 UNC x 2	CCGM3006050 CCGC3008050	M6x60 1/4 - 20 UNC x 2 - 3/8	CCAM3006060 CCAC3008060
	38		1 1/2				
	40						
	42	R 1 1/4					
G6	44.5		1 3/4				
	48.3	R 1 1/2		M6x60 1/4 - 20 UNC x 2 - 1/2	CCGM3006060 CCGC3008060	M6x70 1/4 - 20 UNC x 2 - 3/4	CCAM3006070 CCAC3008070
	50.8		2				
G7	57.2		2 1/4				
	60.3	R 2					
	63.5		2 1/2	M6x90 1/4 - 20 UNC x 3 - 3/8	CCGM3006090 CCGC3008090	M6x100 1/4 - 20 UNC x 4	CCAM3006100 CCAC3008100
	70		2 3/4				
	73						
	76.1	R 2 1/2	3				
G8	88.9	R 3	3 1/2	M6x110 1/4 - 20 UNC x 4 - 3/8	CCGM3006110 CCGC3008110	M6x125 1/4 - 20 UNC x 4 - 7/8	CCAM3006125 CCAC3008125
	101.6		4				

Metal + Kaplama Tipi Metal + Surface Finishing		Vida Tipi Thread Type	
0	Kaplamasız / Uncoated	C	UNC
3	Galvaniz / Galvanized / Fe/Zn 8C Cr3-B	F	UNF
4	CrNi 304 AISI 304	M	Metrik / Metric
6	CrNi 316 AISI 316	W	Whitworth
9	Çinko Nikel / Zinc Nickel Fe/ZnNi		

Farklı malzeme talepleriniz için lütfen LMC Makina'ya danışınız.

For different material request please consult LMC Makina.

Ara Bağlantı Cıvatası / Stacking Bolt — 21

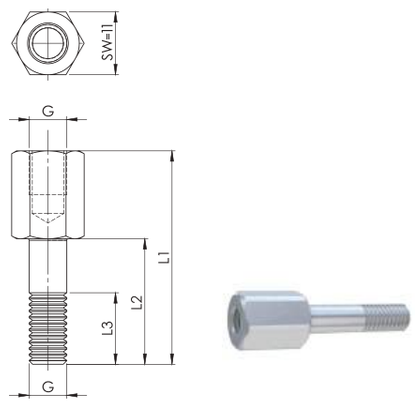

C	C	B	M	3	0	0	6	0	2	0
			Vida Tipi Thread Type	Metal + Kaplama Tipi Metal + Surface Finishing	Vida Ölçüsü Screw - Bolt Size				Cıvata Boyu Screw - Bolt Length	

Ara Bağlantı Plakası / Safety Locking Plate — 22

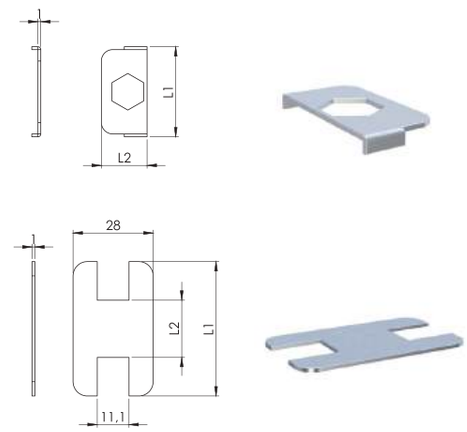

C	H	0	0	T	3	G	0
					Metal + Kaplama Tipi Metal + Surface Finishing	Grup Group	

Grup Group	Dış Çap (ØD) O.D. of Pipe / Tube/Hose mm	Anma Çapı (R) Boru Diş Nominal Bore Pipe inch	Dış Çap (ØD) O.D. of Pipe / Tube/Hose inch	Ölçü Tablosu Dimension Table L1	L2	L3 min.	G	Sipariş Kodu Order Code	Ölçü Tablosu Dimension Table L1	L2	Sipariş Kodu Order Code
G0	6			34	20	12	M6 1/4-20 UNC	CCBM3006020 CCBC3008020	32	17	CH00T3G0
	6.4		1/4								
	8		5/16								
	9.5		3/8								
	10	R 1/8									
	12										
G1	6			34	20	12	M6 1/4-20 UNC	CCBM3006020 CCBC3008020	34	7	CH00T3G1
	6.4		1/4								
	8		5/16								
	9.5		3/8								
	10	R 1/8									
	12										
G2	12.7		1/2	39	25	12	M6 1/4-20 UNC	CCBM3006025 CCBC3008025	40	13	CH00T3G2
	13.5	R 1/4									
	14										
	15										
	16		5/8								
	17.2	R 3/8									
	18										
G3	19		3/4	44	30	12	M6 1/4-20 UNC	CCBM3006030 CCBC3008030	48	20	CH00T3G3
	20										
	21.3	R 1/2									
	22		7/8								
	23										
	25										
	25.4		1								
G4	26.9	R 3/4		48	35	12	M6 1/4-20 UNC	CCBM3006035 CCBC3008035	57	27	CH00T3G4
	28										
	30										
G5	32		1 1/4	64	50	12	M6 1/4-20 UNC	CCBM3006050 CCBC3008050	69	39	CH00T3G5
	33.7	R 1									
	35										
	38		1 1/2								
	40										
	42	R 1 1/4									
G6	44.5		1 3/4	74	60	12	M6 1/4-20 UNC	CCBM3006060 CCBC3008060	85	52	CH00T3G6
	48.3	R 1 1/2									
	50.8		2								
G7	57.2		2 1/4	102	88	12	M6 1/4-20 UNC	CCBM3006088 CCBC3008088	117	81	CH00T3G7
	60.3	R 2									
	63.5		2 1/2								
	70		2 3/4								
	73										
	76.1	R 2 1/2	3								
G8	88.9	R 3	3 1/2	124	110	12	M6 1/4-20 UNC	CCBM3006110 CCBC3008110	144	107	CH00T3G8
	101.6		4								

Metal + Kaplama Tipi Metal + Surface Finishing		Vida Tipi Thread Type	
0	Kaplamasız / Uncoated	C	UNC
3	Galvaniz / Galvanized / Fe/Zn 8C Cr3-B	F	UNF
4	CrNi 304 AISI 304	M	Metrik / Metric
6	CrNi 316 AISI 316	W	Whitworth
9	Çinko Nikel / Zinc Nickel Fe/ZnNi		

Farklı malzeme talepleriniz için lütfen LMC Makina'ya danışınız.

For different material request please consult LMC Makina.

Ara Bağlantı Plakası
Safety Locking Plate 23

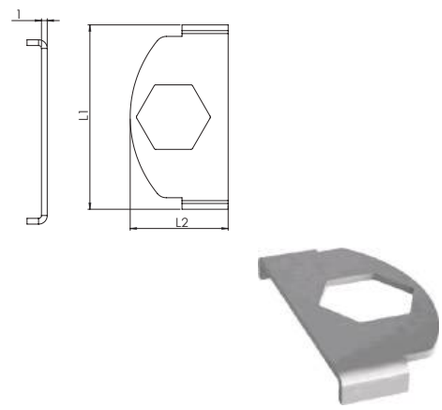

C	H	0	0	T	3	G
					Metal + Kaplama Tipi Metal + Surface Finishing	Grup Group

Grup Group	Dış Çap (ØD) O.D. of Pipe / Tube/Hose mm	Anma Çapı (R) Boru Diş Nominal Bore Pipe inch	Dış Çap (ØD) O.D. of Pipe / Tube/Hose inch
G 0	6		
	6.4		1/4
	8		5/16
	9.5		3/8
	10	R 1/8	
	12		
G 1	6		
	6.4		1/4
	8		5/16
	9.5		3/8
	10	R 1/8	
	12		
G 2	12.7		1/2
	13.5	R 1/4	
	14		
	15		
	16		5/8
	17.2	R 3/8	
	18		
G 3	19		3/4
	20		
	21.3	R 1/2	
	22		7/8
	23		
	25		
	25.4		1
G 4	26.9	R 3/4	
	28		
	30		
G 5	32		1 1/4
	33.7	R 1	
	35		
	38		1 1/2
	40		
	42	R 1 1/4	
G 6	44.5		1 3/4
	48.3	R 1 1/2	
	50.8		2
G 7	57.2		2 1/4
	60.3	R 2	
	63.5		2 1/2
	70		2 3/4
	73		
	76.1	R 2 1/2	3
G 8	88.9	R 3	3 1/2
	101.6		4

Ölçü Tablosu Dimension Table L1	L2	Sipariş Kodu Order Code
32	17	CH00T3G
34	7	
40	13	
48	20	
57	27	
69	39	
85	52	
117	81	
144	107	

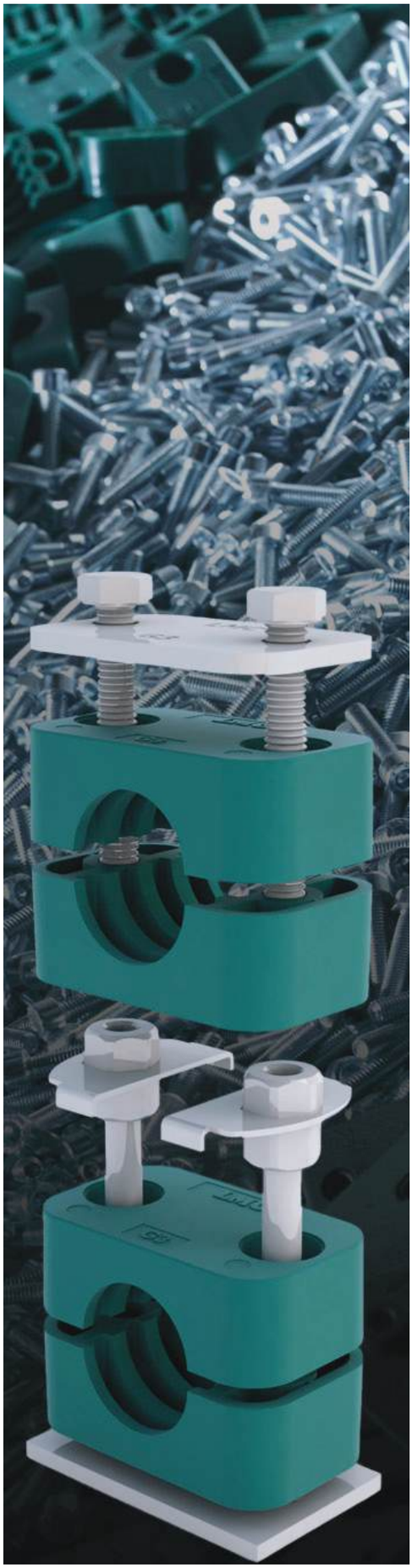

AC-C CLAMPS

Due to its unique drainage system, LMC AC-C clamps are indispensable installation products where sea-salts are aggressively there.

LMC AC-C kelepçeler benzersiz drenaj sistemi sayesinde deniz tuzlarının agresif olduğu yerlerde vazgeçilmez montaj ürünleridir.

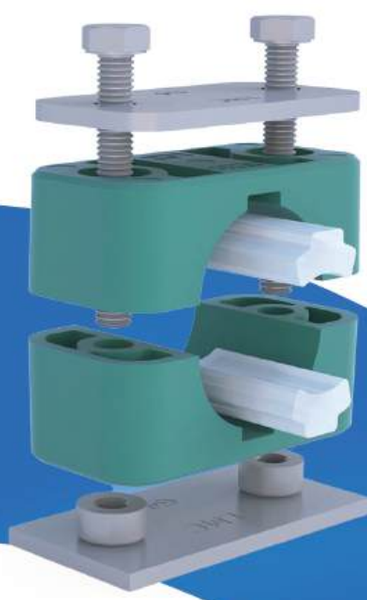

NVR-C CLAMPS

LMC NVR-C Clamps are preferred by the world's leading manufacturers because they precisely and permanently absorb the vibrations occurring in agricultural machinery.

LMC NVR-C Kelepçeleri, tarım makinalarında meydana gelen titreşimleri kesin ve kalıcı bir şekilde absorbe etmelerinden dolayı dünyanın önde gelen üreticileri tarafından tercih edilmektedir.

STRONGLYCONNECTED

LMC

LMC®

AĞIR SERİ
HEAVY SERIES

DIN 3015 / 2

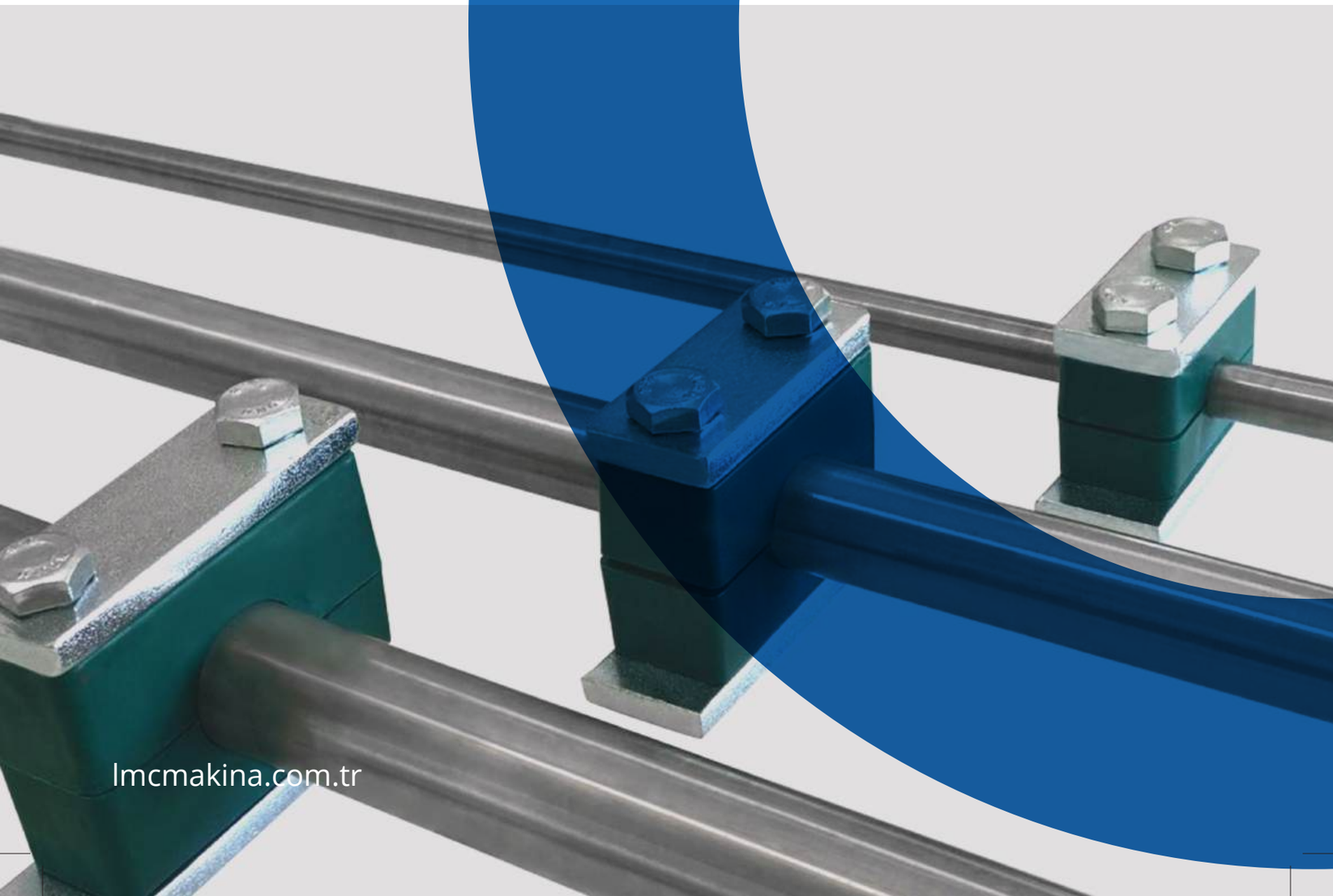

lmcmakina.com.tr

Metal + Kaplama Tipi Metal + Surface Finishing		Gövde Malzemesi Clamp Body Material	
0	Kaplamasız / Uncoated	A	Alüminyum / Aluminum
1	Fosfat / Phosphated / Fe/Znph	N	Polyamid / Polyamide
3	Galvaniz / Galvanized / Fe/Zn 8C Cr3-B	T	TPE
4	CrNi 304 AISI 304	P	Polipropilen / Polypropylene
6	CrNi 316 AISI 316		
9	Çinko Nikel / Zinc Nickel Fe/ZnNi		

Farklı malzeme talepleriniz için lütfen LMC Makina'ya danışınız.

For different material request please consult LMC Makina.

Komple Kelepçe
Complete Clamp
24

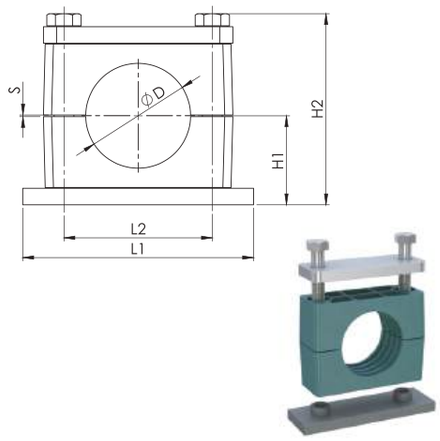

Gövde + Cıvata + Üstlük
Clamp Body + Bolt + Cover Plate
25

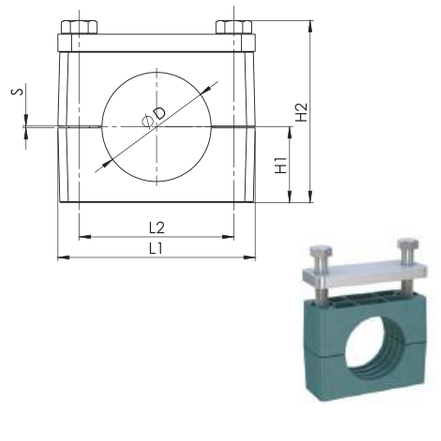

C M 4 0 M 1 3 1 P 1 Y A 1 X X X . X

- Üstlük / Cover Plate
- Üstlük Kaplama Tipi / Cover Plate Finishing
- Altlık Kaplama Tipi / Weld Plate Finishing
- Gövde Malzemesi / Clamp Body Material
- Gövde Renk / Clamp Body Colour
- Grup / Group
- Ölçü / Size

C D 6 8 M 1 3 0 P 1 Y A 1 X X X . X

- Üstlük / Cover Plate
- Üstlük Kaplama Tipi / Cover Plate Finishing
- Altlık Kaplama Tipi / Weld Plate Finishing
- Gövde Malzemesi / Clamp Body Material
- Gövde Renk / Clamp Body Colour
- Grup / Group
- Ölçü / Size

Grup Group	Dış Çap (ØD) O.D. of Pipe / Tube/Hose mm	Anma Çapı (R) Boru Diş Nominal Bore Pipe inch	Dış Çap (ØD) O.D. of Pipe / Tube/Hose inch	Ölçü Tablosu Dimension Table L1	L2	H1	H2	S min.	Genişlik Width	Sipariş Kodu Order Code	Ölçü Tablosu Dimension Table L1	L2	H1	H2	S min.	Genişlik Width	Sipariş Kodu Order Code
A1	6			74	33	24	55	0.6	30	CM40M131P1YA1006.0	55	33	16	47	0.6	30	CD68M130P1YA1006.0
	6.4		1/4							CM40M131P1YA1006.4							CD68M130P1YA1006.4
	8		5/16							CM40M131P1YA1008.0							CD68M130P1YA1008.0
	9.5		3/8							CM40M131P1YA1009.5							CD68M130P1YA1009.5
	10	R 1/8								CM40M131P1YA1010.0							CD68M130P1YA1010.0
	12									CM40M131P1YA1012.0							CD68M130P1YA1012.0
	12.7		1/2							CM40M131P1YA1012.7							CD68M130P1YA1012.7
	13.5	R 1/4								CM40M131P1YA1013.5							CD68M130P1YA1013.5
	14									CM40M131P1YA1014.0							CD68M130P1YA1014.0
	15									CM40M131P1YA1015.0							CD68M130P1YA1015.0
	16		5/8							CM40M131P1YA1016.0							CD68M130P1YA1016.0
	17.2	R 3/8								CM40M131P1YA1017.2							CD68M130P1YA1017.2
	18									CM40M131P1YA1018.0							CD68M130P1YA1018.0
A2	19		3/4	86	45	32	71	0.6	30	CM40M131P1YA2019.0	70	45	24	63	0.6	30	CD68M130P1YA2019.0
	20									CM40M131P1YA2020.0							CD68M130P1YA2020.0
	21.3	R 1/2								CM40M131P1YA2021.3							CD68M130P1YA2021.3
	22		7/8							CM40M131P1YA2022.0							CD68M130P1YA2022.0
	25									CM40M131P1YA2025.0							CD68M130P1YA2025.0
	25.4		1							CM40M131P1YA2025.4							CD68M130P1YA2025.4
	26.9	R 3/4								CM40M131P1YA2026.9							CD68M130P1YA2026.9
	28									CM40M131P1YA2028.0							CD68M130P1YA2028.0
	30									CM40M131P1YA2030.0							CD68M130P1YA2030.0
A3	30			100	60	38	83	0.6	30	CM40M131P1YA3030.0	85	60	30	75	0.6	30	CD68M130P1YA3030.0
	32		1 1/4							CM40M131P1YA3032.0							CD68M130P1YA3032.0
	33.7	R 1								CM40M131P1YA3033.7							CD68M130P1YA3033.7
	35									CM40M131P1YA3035.0							CD68M130P1YA3035.0
	38		1 1/2							CM40M131P1YA3038.0							CD68M130P1YA3038.0
	40									CM40M131P1YA3040.0							CD68M130P1YA3040.0
	42	R 1 1/4								CM40M131P1YA3042.0							CD68M130P1YA3042.0
A4	38		1 1/2	140	90	54.5	117	2	45	CM40M131P1YA4038.0	115	90	44.5	107	2	45	CD68M130P1YA4038.0
	42									CM40M131P1YA4042.0							CD68M130P1YA4042.0
	44.5		1 3/4							CM40M131P1YA4044.5							CD68M130P1YA4044.5
	48.3	R 1 1/2								CM40M131P1YA4048.3							CD68M130P1YA4048.3
	50.8		2							CM40M131P1YA4050.8							CD68M130P1YA4050.8
	55									CM40M131P1YA4055.0							CD68M130P1YA4055.0
	57		2 1/4							CM40M131P1YA4057.0							CD68M130P1YA4057.0
	60.3	R 2								CM40M131P1YA4060.3							CD68M130P1YA4060.3
	63.5		2 1/2							CM40M131P1YA4063.5							CD68M130P1YA4063.5
	65									CM40M131P1YA4065.0							CD68M130P1YA4065.0
	70		2 3/4							CM40M131P1YA4070.0							CD68M130P1YA4070.0

Metal + Kaplama Tipi Metal + Surface Finishing		Gövde Malzemesi Clamp Body Material	
0	Kaplamasız / Uncoated	A	Alüminyum / Aluminum
1	Fosfat / Phosphated / Fe/Znph	N	Polyamid / Polyamide
3	Galvaniz / Galvanized / Fe/Zn 8C Cr3-B	T	TPE
4	CrNi 304 AISI 304	P	Polipropilen / Polypropylene
6	CrNi 316 AISI 316		
9	Çinko Nikel / Zinc Nickel Fe/ZnNi		

Farklı malzeme talepleriniz için lütfen LMC Makina'ya danışınız.

For different material request please consult LMC Makina.

Komple Kelepçe
Complete Clamp
24

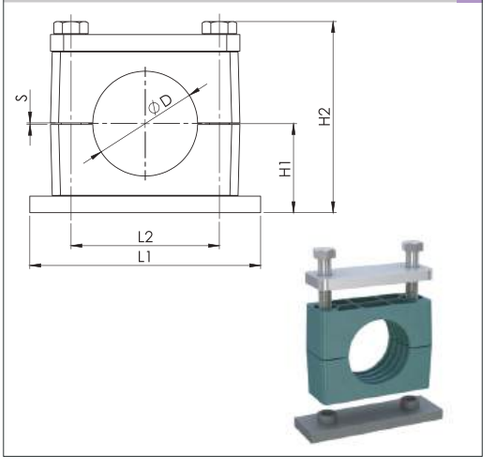

Gövde + Cıvata + Üstlük
Clamp Body + Bolt + Cover Plate
25

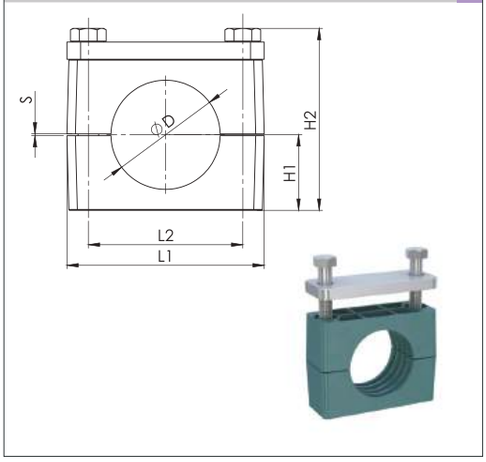

C	M	4	0	M	1	3	1	P	1	Y	A	1	X	X	X	.	X
					Üstlük Cover Plate	Üstlük Kaplama Tipi Cover Plate Finishing	Altlık Kaplama Tipi Weld Plate Finishing	Gövde Malzemesi Clamp Body Material		Gövde Renk Clamp Body Colour	Grup Group		Ölçü Size				

C	D	6	8	M	1	3	0	P	1	Y	A	1	X	X	X	.	X
					Üstlük Cover Plate	Üstlük Kaplama Tipi Cover Plate Finishing	Altlık Kaplama Tipi Weld Plate Finishing	Gövde Malzemesi Clamp Body Material		Gövde Renk Clamp Body Colour	Grup Group		Ölçü Size				

Grup Group	Dış Çap (ØD) O.D. of Pipe / Tube/Hose mm	Anma Çapı (R) Boru Dış Nominal Bore Pipe inch	Dış Çap (ØD) O.D. of Pipe / Tube/Hose inch	Ölçü Tablosu Dimension Table L1	L2	H1	H2	S min.	Genişlik Width	Sipariş Kodu Order Code	Ölçü Tablosu Dimension Table L1	L2	H1	H2	S	Genişlik Width	Sipariş Kodu Order Code
A5	65			180	122	70	150	2	60	CM40M131P1YA5065.0	154	122	60	140	2	60	CD68M130P1YA5065.0
	70									CM40M131P1YA5070.0							CD68M130P1YA5070.0
	73	R 2 1/2	2 7/8							CM40M131P1YA5073.0							CD68M130P1YA5073.0
	76.1	R 2 1/2	3							CM40M131P1YA5076.1							CD68M130P1YA5076.1
	80									CM40M131P1YA5080.0							CD68M130P1YA5080.0
	82.5		3 1/4							CM40M131P1YA5082.5							CD68M130P1YA5082.5
	88.9	R 3	3 1/2							CM40M131P1YA5088.9							CD68M130P1YA5088.9
A6	88.9	R 3	3 1/2	226	168	99	211	2	80	CM40M131P1YA6088.9	206	168	84	196	2	80	CD68M130P1YA6088.9
	100									CM40M131P1YA6100.0							CD68M130P1YA6100.0
	101.6	R 3 1/2								CM40M131P1YA6101.6							CD68M130P1YA6101.6
	108		4 1/4							CM40M131P1YA6108.0							CD68M130P1YA6108.0
	114.3	R 4								CM40M131P1YA6114.3							CD68M130P1YA6114.3
	127		5							CM40M131P1YA6127.0							CD68M130P1YA6127.0
	133		5 1/4							CM40M131P1YA6133.0							CD68M130P1YA6133.0
A7	133		5 1/4	270	205	115	245	3	90	CM40M131P1YA7133.0	251	205	100	230	3	90	CD68M130P1YA7133.0
	139.7	R 5								CM40M131P1YA7139.7							CD68M130P1YA7139.7
	152.4		6							CM40M131P1YA7152.4							CD68M130P1YA7152.4
	159		6 1/4							CM40M131P1YA7159.0							CD68M130P1YA7159.0
	165		6 1/2							CM40M131P1YA7165.0							CD68M130P1YA7165.0
	168.3	R 6								CM40M131P1YA7168.3							CD68M130P1YA7168.3
A8	168.3	R 6		340	265	160	339	3	120	CM40M131P1YA8168.3	335	265	135	314	3	120	CD68M130P1YA8168.3
	177.8		7							CM40M131P1YA8177.8							CD68M130P1YA8177.8
	193.7		7 5/8							CM40M131P1YA8193.7							CD68M130P1YA8193.7
	216		8 1/2							CM40M131P1YA8216.0							CD68M130P1YA8216.0
	219.1	R 8								CM40M131P1YA8219.1							CD68M130P1YA8219.0
A9	219.1	R 8		520	395	235	489	8	160	CM40M131P1YA9219.1	470	395	205	459	8	160	CD68M130P1YA9219.0
	244.5									CM40M131P1YA9244.5							CD68M130P1YA9244.5
	273	R 10								CM40M131P1YA9273.0							CD68M130P1YA9273.0
	323.9	R 12								CM40M131P1YA9323.9							CD68M130P1YA9323.9
A10	355.6	R 14		680	534	295	609	18	180	CM40M131P1YA0355.6	630	534	265	579	18	180	CD68M130P1YA0355.6
	406.4	R 16								CM40M131P1YA0406.4							CD68M130P1YA0406.4

Metal + Kaplama Tipi Metal + Surface Finishing		Gövde Malzemesi Clamp Body Material	
0	Kaplamasız / Uncoated	A	Alüminyum / Aluminum
1	Fosfat / Phosphated / Fe/Znph	N	Polyamid / Polyamide
3	Galvaniz / Galvanized / Fe/Zn 8C Cr3-B	T	TPE
4	CrNi 304 AISI 304	P	Polipropilen / Polypropylene
6	CrNi 316 AISI 316		
9	Çinko Nikel / Zinc Nickel Fe/ZnNi		

Montaj Delikli Kelepçe
Complete Clamp with Elongated Weld Plate
26

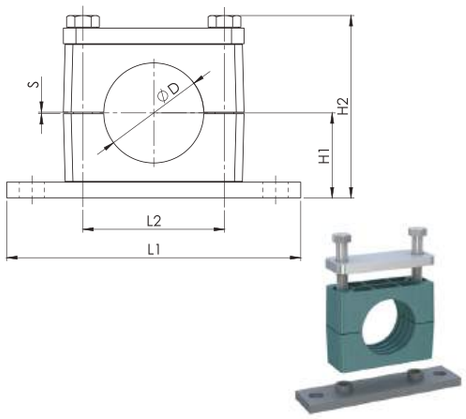

Sırt Sırta Kelepçe
Double Clamp
27

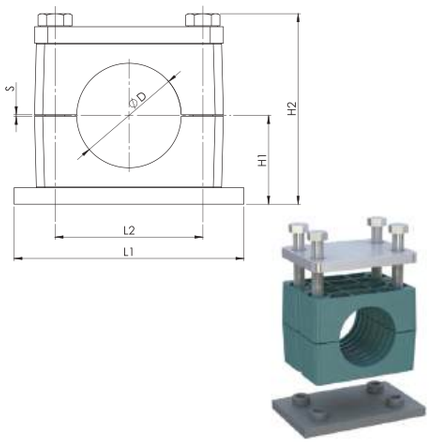

Farklı malzeme talepleriniz için lütfen LMC Makina'ya danışınız.

For different material request please consult LMC Makina.

C	M	4	1	M	1	3	1	P	1	Y	A	1	X	X	X	.	X
					Üstlük Cover Plate	**Üstlük Kaplama Tipi** Cover Plate Finishing	**Altlık Kaplama Tipi** Weld Plate Finishing	**Gövde Malzemesi** Clamp Body Material		**Gövde Renk** Clamp Body Colour	**Grup** Group		**Ölçü** Size				

C	M	6	0	M	1	3	1	P	1	Y	A	1	X	X	X	.	X
					Üstlük Cover Plate	**Üstlük Kaplama Tipi** Cover Plate Finishing	**Altlık Kaplama Tipi** Weld Plate Finishing	**Gövde Malzemesi** Clamp Body Material		**Gövde Renk** Clamp Body Colour	**Grup** Group		**Ölçü** Size				

Grup Group	Dış Çap (ØD) O.D. of Pipe / Tube/Hose mm	Anma Çapı (R) Boru Diş Nominal Bore Pipe inch	Dış Çap (ØD) O.D. of Pipe / Tube/Hose inch	Ölçü Tablosu Dimension Table L1	L2	H1	H2	S min.	Genişlik Width	Sipariş Kodu Order Code	Ölçü Tablosu Dimension Table L1	L2	H1	H2	S min.	Genişlik Width	Sipariş Kodu Order Code
A1	6			113	33	24	55	0.6	30	CM41M131P1YA1006.0	74	33	24	55	0.6	60	CM60M131P1YA1006.0
	6.4		1/4							CM41M131P1YA1006.4							CM60M131P1YA1006.4
	8		5/16							CM41M131P1YA1008.0							CM60M131P1YA1008.0
	9.5		3/8							CM41M131P1YA1009.5							CM60M131P1YA1009.5
	10	R 1/8								CM41M131P1YA1010.0							CM60M131P1YA1010.0
	12									CM41M131P1YA1012.0							CM60M131P1YA1012.0
	12.7		1/2							CM41M131P1YA1012.7							CM60M131P1YA1012.7
	13.5	R 1/4								CM41M131P1YA1013.5							CM60M131P1YA1013.5
	14									CM41M131P1YA1014.0							CM60M131P1YA1014.0
	15									CM41M131P1YA1015.0							CM60M131P1YA1015.0
	16		5/8							CM41M131P1YA1016.0							CM60M131P1YA1016.0
	17.2	R 3/8								CM41M131P1YA1017.2							CM60M131P1YA1017.2
	18									CM41M131P1YA1018.0							CM60M131P1YA1018.0
A2	19		3/4	125	45	32	71	0.6	30	CM41M131P1YA2019.0	86	45	32	71	0.6	60	CM60M131P1YA2019.0
	20									CM41M131P1YA2020.0							CM60M131P1YA2020.0
	21.3	R 1/2								CM41M131P1YA2021.3							CM60M131P1YA2021.3
	22		7/8							CM41M131P1YA2022.0							CM60M131P1YA2022.0
	25									CM41M131P1YA2025.0							CM60M131P1YA2025.0
	25.4		1							CM41M131P1YA2025.4							CM60M131P1YA2025.4
	26.9	R 3/4								CM41M131P1YA2026.9							CM60M131P1YA2026.9
	28									CM41M131P1YA2028.0							CM60M131P1YA2028.0
	30									CM41M131P1YA2030.0							CM60M131P1YA2030.0
A3	30			140	60	38	83	0.6	30	CM41M131P1YA3030.0	100	60	38	83	0.6	60	CM60M131P1YA3030.0
	32		1 1/4							CM41M131P1YA3032.0							CM60M131P1YA3032.0
	33.7	R 1								CM41M131P1YA3033.7							CM60M131P1YA3033.7
	35									CM41M131P1YA3035.0							CM60M131P1YA3035.0
	38		1 1/2							CM41M131P1YA3038.0							CM60M131P1YA3038.0
	40									CM41M131P1YA3040.0							CM60M131P1YA3040.0
	42	R 1 1/4								CM41M131P1YA3042.0							CM60M131P1YA3042.0
A4	38		1 1/2	187	90	54.5	117	2	45	CM41M131P1YA4038.0	140	90	54.5	117	2	90	CM60M131P1YA4038.0
	42									CM41M131P1YA4042.0							CM60M131P1YA4042.0
	44.5		1 3/4							CM41M131P1YA4044.5							CM60M131P1YA4044.5
	48.3	R 1 1/2								CM41M131P1YA4048.3							CM60M131P1YA4048.3
	50.8		2							CM41M131P1YA4050.8							CM60M131P1YA4050.8
	55									CM41M131P1YA4055.0							CM60M131P1YA4055.0
	57		2 1/4							CM41M131P1YA4057.0							CM60M131P1YA4057.0
	60.3	R 2								CM41M131P1YA4060.3							CM60M131P1YA4060.3
	63.5		2 1/2							CM41M131P1YA4063.5							CM60M131P1YA4063.5
	65									CM41M131P1YA4065.0							CM60M131P1YA4065.0
	70		2 3/4							CM41M131P1YA4070.0							CM60M131P1YA4070.0

Metal + Kaplama Tipi Metal + Surface Finishing		Gövde Malzemesi Clamp Body Material	
0	Kaplamasız / Uncoated	A	Alüminyum / Aluminum
1	Fosfat / Phosphated / Fe/Znph	N	Polyamid / Polyamide
3	Galvaniz / Galvanized / Fe/Zn 8C Cr3-B	T	TPE
4	CrNi 304 AISI 304	P	Polipropilen / Polypropylene
6	CrNi 316 AISI 316		
9	Çinko Nikel / Zinc Nickel Fe/ZnNi		

Montaj Delikli Kelepçe
Complete Clamp with Elongated Weld Plate
26

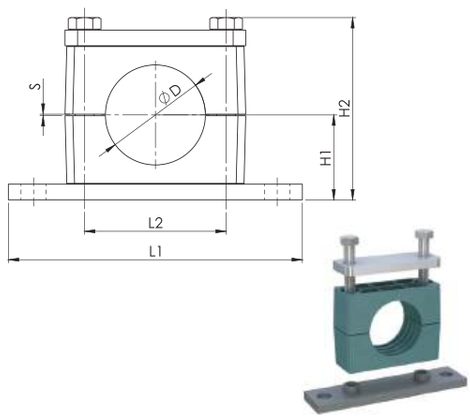

Sırt Sırta Kelepçe
Double Clamp
27

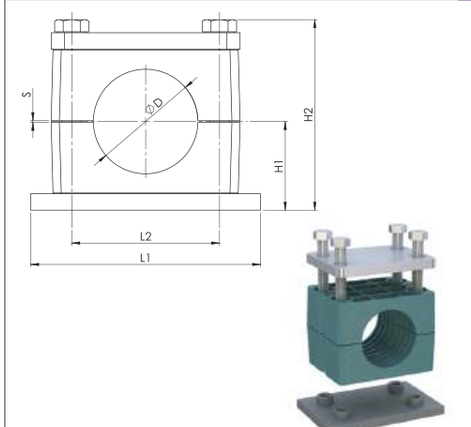

Farklı malzeme talepleriniz için lütfen LMC Makina'ya danışınız.

For different material request please consult LMC Makina.

C	M	4	1	M	1	3	1	P	1	Y	A	1	X	X	X	.	X
					Üstlük Cover Plate	**Üstlük Kaplama Tipi** Cover Plate Finishing	**Altlık Kaplama Tipi** Weld Plate Finishing	**Gövde Malzemesi** Clamp Body Material		**Gövde Renk** Clamp Body Colour	**Grup** Group		**Ölçü** Size				

C	M	6	0	M	1	3	1	P	1	Y	A	1	X	X	X	.	X
					Üstlük Cover Plate	**Üstlük Kaplama Tipi** Cover Plate Finishing	**Altlık Kaplama Tipi** Weld Plate Finishing	**Gövde Malzemesi** Clamp Body Material		**Gövde Renk** Clamp Body Colour	**Grup** Group		**Ölçü** Size				

Grup Group	Dış Çap (ØD) O.D. of Pipe / Tube/Hose mm	Anma Çapı (R) Boru Diş Nominal Bore Pipe inch	Dış Çap (ØD) O.D. of Pipe / Tube/Hose inch	Ölçü Tablosu Dimension Table L1	L2	H1	H2	S min.	Genişlik Width	Sipariş Kodu Order Code
A5	65			238	122	70	150	2	60	CM41M131P1YA5065.0
	70									CM41M131P1YA5070.0
	73	R 2 1/2	2 7/8							CM41M131P1YA5073.0
	76.1	R 2 1/2	3							CM41M131P1YA5076.1
	80									CM41M131P1YA5080.0
	82.5		3 1/4							CM41M131P1YA5082.5
	88.9	R 3	3 1/2							CM41M131P1YA5088.9
A6	88.9	R 3	3 1/2	309	168	99	211	2	80	CM41M131P1YA6088.9
	100									CM41M131P1YA6100.0
	101.6	R 3 1/2								CM41M131P1YA6101.6
	108		4 1/4							CM41M131P1YA6108.0
	114.3	R 4								CM41M131P1YA6114.3
	127		5							CM41M131P1YA6127.0
	133		5 1/4							CM41M131P1YA6133.0
A7	133			370	205	115	245	3	90	CM41M131P1YA7133.0
	139.7	R 5								CM41M131P1YA7139.7
	152.4		6							CM41M131P1YA7152.4
	159		6 1/4							CM41M131P1YA7159.0
	165		6 1/2							CM41M131P1YA7165.0
	168.3	R 6								CM41M131P1YA7168.3
A8	168.3	R 6		440	265	160	339	3	120	CM41M131P1YA8168.3
	177.8		7							CM41M131P1YA8177.8
	193.7		7 5/8							CM41M131P1YA8193.7
	216		8 1/2							CM41M131P1YA8216.0
	219.1	R 8								CM41M131P1YA8219.1
A9	219.1	R 8		590	395	235	489	8	160	CM41M131P1YA9219.1
	244.5									CM41M131P1YA9244.5
	273	R 10								CM41M131P1YA9273.0
	323.9	R 12								CM41M131P1YA9323.9
A10	355.6	R 14		750	534	295	609	18	180	CM41M131P1YA0355.6
	406.4	R 16								CM41M131P1YA0406.4

Ölçü Tablosu Dimension Table L1	L2	H1	H2	S min.	Genişlik Width	Sipariş Kodu Order Code
180	122	70	150	2	120	CM60M131P1YA5065.0
						CM60M131P1YA5070.0
						CM60M131P1YA5073.0
						CM60M131P1YA5076.1
						CM60M131P1YA5080.0
						CM60M131P1YA5082.5
						CM60M131P1YA5088.9
226	168	99	211	2	160	CM60M131P1YA6088.9
						CM60M131P1YA6100.0
						CM60M131P1YA6101.6
						CM60M131P1YA6108.0
						CM60M131P1YA6114.3
						CM60M131P1YA6127.0
						CM60M131P1YA6133.0
270	205	115	245	3	182	CM60M131P1YA7133.0
						CM60M131P1YA7139.7
						CM60M131P1YA7152.4
						CM60M131P1YA7159.0
						CM60M131P1YA7165.0
						CM60M131P1YA7168.3
340	265	160	339	3	240	CM60M131P1YA8168.3
						CM60M131P1YA8177.8
						CM60M131P1YA8193.7
						CM60M131P1YA8216.0
						CM60M131P1YA8219.1
520	395	235	489	8	324	CM60M131P1YA9219.1
						CM60M131P1YA9244.5
						CM60M131P1YA9273.0
						CM60M131P1YA9323.9
680	534	295	609	18	364	CM60M131P1YA0355.6
						CM60M131P1YA0406.4

Metal + Kaplama Tipi Metal + Surface Finishing		Gövde Malzemesi Clamp Body Material	
0	Kaplamasız / Uncoated	A	Alüminyum / Aluminum
1	Fosfat / Phosphated / Fe/Znph	N	Polyamid / Polyamide
3	Galvaniz / Galvanized / Fe/Zn 8C Cr3-B	T	TPE
4	CrNi 304 AISI 304	P	Polipropilen / Polypropylene
6	CrNi 316 AISI 316		
9	Çinko Nikel / Zinc Nickel Fe/ZnNi		

Sırt Sırta Montaj Delikli Kelepçe
Double Clamp with Elongated Weld Plate

28

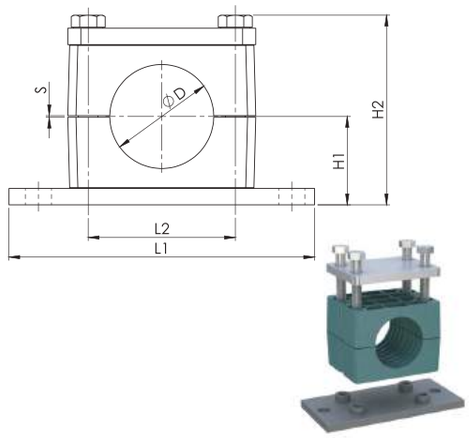

Raya Uyumlu Kelepçe
Clamp with Rail Nut

29

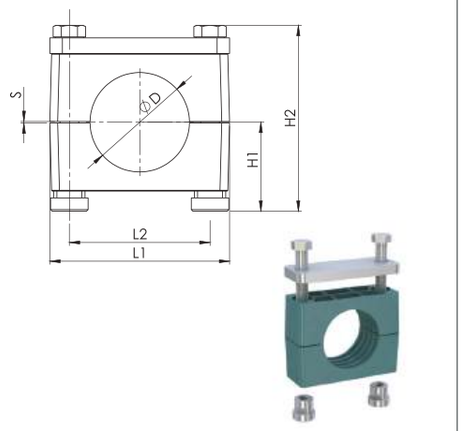

Farklı malzeme talepleriniz için lütfen LMC Makina'ya danışınız.

For different material request please consult LMC Makina.

C	M	6	1	M	1	3	1	P	1	Y	A	1	X	X	X	.	X
					ÜSTLIK Cover Plate	ÜSTLIK Kaplama Tipi Cover Plate Finishing	ALTLIK Kaplama Tipi Weld Plate Finishing	Gövde Malzemesi Clamp Body Material		Gövde Renk Clamp Body Colour	Grup Group		Ölçü Size				

C	D	7	0	M	1	3	3	P	1	Y	A	1	X	X	X	.	X
					ÜSTLIK Cover Plate	ÜSTLIK Kaplama Tipi Cover Plate Finishing	ALTLIK Kaplama Tipi Weld Plate Finishing	Gövde Malzemesi Clamp Body Material		Gövde Renk Clamp Body Colour	Grup Group		Ölçü Size				

Grup Group	Dış Çap (ØD) O.D. of Pipe / Tube/Hose mm	Anma Çapı (R) Boru Diş Nominal Bore Pipe inch	Dış Çap (ØD) O.D. of Pipe / Tube/Hose inch	Ölçü Tablosu Dimension Table L1	L2	H1	H2	S min.	Genişlik Width	Sipariş Kodu Order Code	Ölçü Tablosu Dimension Table L1	L2	H1	H2	S min.	Genişlik Width	Sipariş Kodu Order Code
A1	6			113	33	24	55	0.6	60	CM61M131P1YA1006.0	55	33	28.5	59.5	0.6	30	CD70M133P1YA1006.0
	6.4		1/4							CM61M131P1YA1006.4							CD70M133P1YA1006.4
	8		5/16							CM61M131P1YA1008.0							CD70M133P1YA1008.0
	9.5		3/8							CM61M131P1YA1009.5							CD70M133P1YA1009.5
	10	R 1/8								CM61M131P1YA1010.0							CD70M133P1YA1010.0
	12									CM61M131P1YA1012.0							CD70M133P1YA1012.0
	12.7		1/2							CM61M131P1YA1012.7							CD70M133P1YA1012.7
	13.5	R 1/4								CM61M131P1YA1013.5							CD70M133P1YA1013.5
	14									CM61M131P1YA1014.0							CD70M133P1YA1014.0
	15									CM61M131P1YA1015.0							CD70M133P1YA1015.0
	16		5/8							CM61M131P1YA1016.0							CD70M133P1YA1016.0
	17.2	R 3/8								CM61M131P1YA1017.2							CD70M133P1YA1017.2
	18									CM61M131P1YA1018.0							CD70M133P1YA1018.0
A2	19		3/4	125	45	32	71	0.6	60	CM61M131P1YA2019.0	70	45	36.5	75.5	0.6	30	CD70M133P1YA2019.0
	20									CM61M131P1YA2020.0							CD70M133P1YA2020.0
	21.3	R 1/2								CM61M131P1YA2021.3							CD70M133P1YA2021.3
	22		7/8							CM61M131P1YA2022.0							CD70M133P1YA2022.0
	25									CM61M131P1YA2025.0							CD70M133P1YA2025.0
	25.4		1							CM61M131P1YA2025.4							CD70M133P1YA2025.4
	26.9	R 3/4								CM61M131P1YA2026.9							CD70M133P1YA2026.9
	28									CM61M131P1YA2028.0							CD70M133P1YA2028.0
	30									CM61M131P1YA2030.0							CD70M133P1YA2030.0
A3	30			140	60	38	83	0.6	60	CM61M131P1YA3030.0	85	60	42.5	87.5	0.6	30	CD70M133P1YA3030.0
	32		1 1/4							CM61M131P1YA3032.0							CD70M133P1YA3032.0
	33.7	R 1								CM61M131P1YA3033.7							CD70M133P1YA3033.7
	35									CM61M131P1YA3035.0							CD70M133P1YA3035.0
	38		1 1/2							CM61M131P1YA3038.0							CD70M133P1YA3038.0
	40									CM61M131P1YA3040.0							CD70M133P1YA3040.0
	42	R 1 1/4								CM61M131P1YA3042.0							CD70M133P1YA3042.0
A4	38		1 1/2	187	90	54.5	117	2	90	CM61M131P1YA4038.0	115	90	58	120.5	2	45	CD70M133P1YA4038.0
	42									CM61M131P1YA4042.0							CD70M133P1YA4042.0
	44.5		1 3/4							CM61M131P1YA4044.5							CD70M133P1YA4044.5
	48.3	R 1 1/2								CM61M131P1YA4048.3							CD70M133P1YA4048.3
	50.8		2							CM61M131P1YA4050.8							CD70M133P1YA4050.8
	55									CM61M131P1YA4055.0							CD70M133P1YA4055.0
	57		2 1/4							CM61M131P1YA4057.0							CD70M133P1YA4057.0
	60.3	R 2								CM61M131P1YA4060.3							CD70M133P1YA4060.3
	63.5		2 1/2							CM61M131P1YA4063.5							CD70M133P1YA4063.5
	65									CM61M131P1YA4065.0							CD70M133P1YA4065.0
	70		2 3/4							CM61M131P1YA4070.0							CD70M133P1YA4070.0

Metal + Kaplama Tipi Metal + Surface Finishing		Gövde Malzemesi Clamp Body Material	
0	Kaplamasız / Uncoated	A	Alüminyum / Aluminum
1	Fosfat / Phosphated / Fe/Znph	N	Polyamid / Polyamide
3	Galvaniz / Galvanized / Fe/Zn 8C Cr3-B	T	TPE
4	CrNi 304 AISI 304	P	Polipropilen / Polypropylene
6	CrNi 316 AISI 316		
9	Çinko Nikel / Zinc Nickel Fe/ZnNi		

Farklı malzeme talepleriniz için lütfen LMC Makina'ya danışınız.

For different material request please consult LMC Makina.

Sırt Sırta Montaj Delikli Kelepçe
Double Clamp with Elongated Weld Plate

28

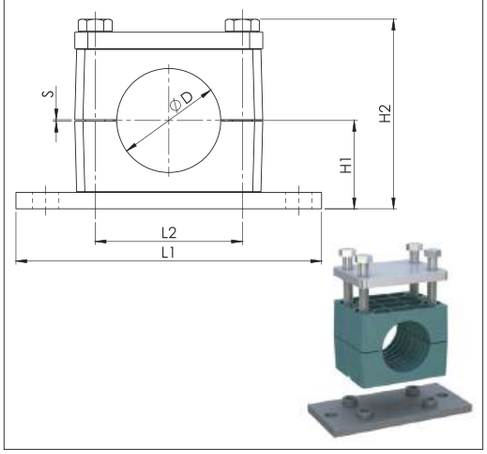

C	M	6	1	M	1	3	1	P	1	Y	A	1	X	X	X	.	X
					Üstlik Cover Plate	**Üstlik Kaplama Tipi** Cover Plate Finishing	**Altlık Kaplama Tipi** Weld Plate Finishing	**Gövde Malzemesi** Clamp Body Material		**Gövde Renk** Clamp Body Colour	**Grup** Group		**Ölçü** Size				

Grup Group	Dış Çap (ØD) O.D. of Pipe / Tube/Hose mm	Anma Çapı (R) Boru Diş Nominal Bore Pipe inch	Dış Çap (ØD) O.D. of Pipe / Tube/Hose inch	Ölçü Tablosu Dimension Table L1	L2	H1	H2	S min.	Genişlik Width	Sipariş Kodu Order Code
A5	65			238	122	70	150	2	120	CM61M131P1YA5065.0
	70									CM61M131P1YA5070.0
	73	R 2 1/2	2 7/8							CM61M131P1YA5073.0
	76.1	R 2 1/2	3							CM61M131P1YA5076.1
	80									CM61M131P1YA5080.0
	82.5		3 1/4							CM61M131P1YA5082.5
	88.9	R 3	3 1/2							CM61M131P1YA5088.9
A6	88.9	R 3	3 1/2	309	168	99	211	2	160	CM61M131P1YA6088.9
	100									CM61M131P1YA6100.0
	101.6	R 3 1/2								CM61M131P1YA6101.6
	108		4 1/4							CM61M131P1YA6108.0
	114.3	R 4								CM61M131P1YA6114.3
	127		5							CM61M131P1YA6127.0
	133		5 1/4							CM61M131P1YA6133.0
A7	133		5 1/4	370	205	115	245	3	182	CM61M131P1YA7133.0
	139.7	R 5								CM61M131P1YA7139.7
	152.4									CM61M131P1YA7152.4
	159		6							CM61M131P1YA7159.0
	165		6 1/4							CM61M131P1YA7165.0
	168.3	R 6	6 1/2							CM61M131P1YA7168.3
A8	168.3	R 6		440	265	160	339	3	240	CM61M131P1YA8168.3
	177.8									CM61M131P1YA8177.8
	193.7		7							CM61M131P1YA8193.7
	216		7 5/8							CM61M131P1YA8216.0
	219.1	R 8	8 1/2							CM61M131P1YA8219.1
A9	219.1	R 8		590	395	235	489	8	354	CM61M131P1YA9219.1
	244.5									CM61M131P1YA9244.5
	273	R 10								CM61M131P1YA9273.0
	323.9	R 12								CM61M131P1YA9323.9
A10	355.6	R 14		750	534	295	609	18	364	CM61M131P1YA0355.6
	406.4	R 16								CM61M131P1YA0406.4

Metal + Kaplama Tipi Metal + Surface Finishing		Gövde Malzemesi Clamp Body Material	
0	Kaplamasız / Uncoated	A	Alüminyum / Aluminum
1	Fosfat / Phosphated / Fe/Znph	N	Polyamid / Polyamide
3	Galvaniz / Galvanized / Fe/Zn 8C Cr3-B	T	TPE
4	CrNi 304 AISI 304	P	Polipropilen / Polypropylene
6	CrNi 316 AISI 316		
9	Çinko Nikel / Zinc Nickel Fe/ZnNi		

Farklı malzeme talepleriniz için lütfen LMC Makina'ya danışınız.

For different material request please consult LMC Makina.

Kelepçe Üst Takım
Clamp Upper Set

30

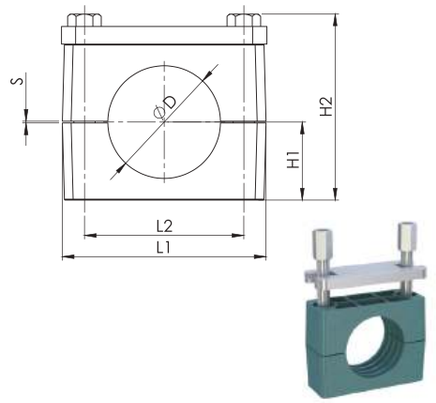

Gövde + Cıvata + Altlık
Clamp Body + Screw + Weld Plate

31

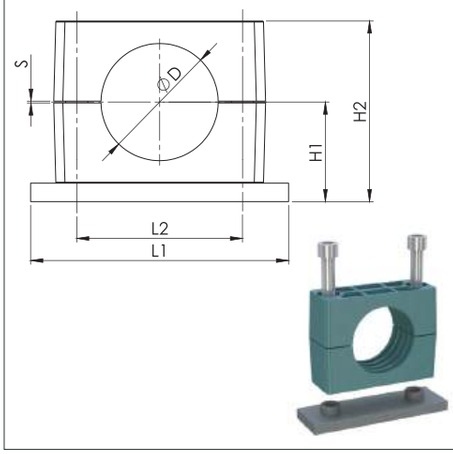

C	D	a	a	M	6	3	0	P	1	Y	A	1	X	X	X	.	X
					ÜSTlik Cover Plate	ÜSTlik Kaplama Tipi Cover Plate Finishing	Altlık Kaplama Tipi Weld Plate Finishing	Gövde Malzemesi Clamp Body Material		Gövde Renk Clamp Body Colour	Grup Group		Ölçü Size				

C	M	0	0	M	0	0	1	P	1	Y	A	1	X	X	X	.	X
					ÜSTlik Cover Plate	ÜSTlik Kaplama Tipi Cover Plate Finishing	Altlık Kaplama Tipi Weld Plate Finishing	Gövde Malzemesi Clamp Body Material		Gövde Renk Clamp Body Colour	Grup Group		Ölçü Size				

Grup Group	Dış Çap (ØD) O.D. of Pipe / Tube/Hose mm	Anma Çapı (R) Boru Diş Nominal Bore Pipe inch	Dış Çap (ØD) O.D. of Pipe / Tube/Hose inch	Ölçü Tablosu Dimension Table L1	L2	H1	H2	S min.	Genişlik Width	Sipariş Kodu Order Code	Ölçü Tablosu Dimension Table L1	L2	H1	H2	S min.	Genişlik Width	Sipariş Kodu Order Code
A1	6			55	33	16	47	0.6	30	CDaaM630P1YA1006.0	74	33	24	40	0.6	30	CM00M001P1YA1006.0
	6.4		1/4							CDaaM630P1YA1006.4							CM00M001P1YA1006.4
	8		5/16							CDaaM630P1YA1008.0							CM00M001P1YA1008.0
	9.5		3/8							CDaaM630P1YA1009.5							CM00M001P1YA1009.5
	10	R 1/8								CDaaM630P1YA1010.0							CM00M001P1YA1010.0
	12									CDaaM630P1YA1012.0							CM00M001P1YA1012.0
	12.7		1/2							CDaaM630P1YA1012.7							CM00M001P1YA1012.7
	13.5	R 1/4								CDaaM630P1YA1013.5							CM00M001P1YA1013.5
	14									CDaaM630P1YA1014.0							CM00M001P1YA1014.0
	15									CDaaM630P1YA1015.0							CM00M001P1YA1015.0
	16		5/8							CDaaM630P1YA1016.0							CM00M001P1YA1016.0
	17.2	R 3/8								CDaaM630P1YA1017.2							CM00M001P1YA1017.2
	18									CDaaM630P1YA1018.0							CM00M001P1YA1018.0
A2	19		3/4	70	45	24	63	0.6	30	CDaaM630P1YA2019.0	86	45	32	56	0.6	30	CM00M001P1YA2019.0
	20									CDaaM630P1YA2020.0							CM00M001P1YA2020.0
	21.3	R 1/2								CDaaM630P1YA2021.3							CM00M001P1YA2021.3
	22		7/8							CDaaM630P1YA2022.0							CM00M001P1YA2022.0
	25									CDaaM630P1YA2025.0							CM00M001P1YA2025.0
	25.4		1							CDaaM630P1YA2025.4							CM00M001P1YA2025.4
	26.9	R 3/4								CDaaM630P1YA2026.9							CM00M001P1YA2026.9
	28									CDaaM630P1YA2028.0							CM00M001P1YA2028.0
	30									CDaaM630P1YA2030.0							CM00M001P1YA2030.0
A3	30			85	60	30	75	0.6	30	CDaaM630P1YA3030.0	100	60	38	68	0.6	30	CM00M001P1YA3030.0
	32		1 1/4							CDaaM630P1YA3032.0							CM00M001P1YA3032.0
	33.7	R 1								CDaaM630P1YA3033.7							CM00M001P1YA3033.7
	35									CDaaM630P1YA3035.0							CM00M001P1YA3035.0
	38		1 1/2							CDaaM630P1YA3038.0							CM00M001P1YA3038.0
	40									CDaaM630P1YA3040.0							CM00M001P1YA3040.0
	42	R 1 1/4								CDaaM630P1YA3042.0							CM00M001P1YA3042.0
A4	38		1 1/2	115	90	44.5	107	2	45	CDaaM630P1YA4038.0	140	90	54.5	99	2	45	CM00M001P1YA4038.0
	42									CDaaM630P1YA4042.0							CM00M001P1YA4042.0
	44.5		1 3/4							CDaaM630P1YA4044.5							CM00M001P1YA4044.5
	48.3	R 1 1/2								CDaaM630P1YA4048.3							CM00M001P1YA4048.3
	50.8		2							CDaaM630P1YA4050.8							CM00M001P1YA4050.8
	55									CDaaM630P1YA4055.0							CM00M001P1YA4055.0
	57		2 1/4							CDaaM630P1YA4057.0							CM00M001P1YA4057.0
	60.3	R 2								CDaaM630P1YA4060.3							CM00M001P1YA4060.3
	63.5		2 1/2							CDaaM630P1YA4063.5							CM00M001P1YA4063.5
	65									CDaaM630P1YA4065.0							CM00M001P1YA4065.0
	70		2 3/4							CDaaM630P1YA4070.0							CM00M001P1YA4070.0

Metal + Kaplama Tipi Metal + Surface Finishing		Gövde Malzemesi Clamp Body Material	
0	Kaplamasız / Uncoated	A	Alüminyum / Aluminum
1	Fosfat / Phosphated / Fe/Znph	N	Polyamid / Polyamide
3	Galvaniz / Galvanized / Fe/Zn 8C Cr3-B	T	TPE
4	CrNi 304 AISI 304	P	Polipropilen / Polypropylene
6	CrNi 316 AISI 316		
9	Çinko Nikel / Zinc Nickel Fe/ZnNi		

Farklı malzeme talepleriniz için lütfen LMC Makina'ya danışınız.

For different material request please consult LMC Makina.

Kelepçe Üst Takım
Clamp Upper Set
30

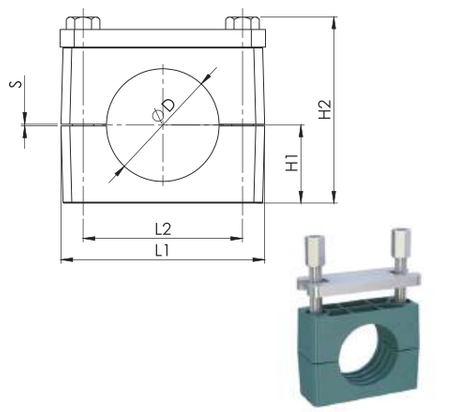

C	D	a	a	M	6	3	0	P	1	Y	A	1	X	X	X	.	X
					Üstlik Cover Plate	Üstlik Kaplama Tipi Cover Plate Finishing	Altlık Kaplama Tipi Weld Plate Finishing	Gövde Malzemesi Clamp Body Material		Gövde Renk Clamp Body Colour	Grup Group		Ölçü Size				

Grup Group	Dış Çap (ØD) O.D. of Pipe / Tube/Hose mm	Anma Çapı (R) Boru Diş Nominal Bore Pipe inch	Dış Çap (ØD) O.D. of Pipe / Tube/Hose inch	Ölçü Tablosu Dimension Table L1	L2	H1	H2	S min.	Genişlik Width	Sipariş Kodu Order Code
A5	65			154	122	60	140	2	60	CDaaM630P1YA5065.0
	70									CDaaM630P1YA5070.0
	73	R 2 1/2	2 7/8							CDaaM630P1YA5073.0
	76.1	R 2 1/2	3							CDaaM630P1YA5076.1
	80									CDaaM630P1YA5080.0
	82.5		3 1/4							CDaaM630P1YA5082.5
	88.9	R 3	3 1/2							CDaaM630P1YA5088.9
A6	88.9	R 3	3 1/2	206	168	84	196	2	80	CDaaM630P1YA6088.9
	100									CDaaM630P1YA6100.0
	101.6	R 3 1/2								CDaaM630P1YA6101.6
	108		4 1/4							CDaaM630P1YA6108.0
	114.3	R 4								CDaaM630P1YA6114.3
	127		5							CDaaM630P1YA6127.0
	133		5 1/4							CDaaM630P1YA6133.0
A7	133			251	205	100	230	3	90	CDaaM630P1YA7133.0
	139.7	R 5								CDaaM630P1YA7139.7
	152.4		6							CDaaM630P1YA7152.4
	159		6 1/4							CDaaM630P1YA7159.0
	165		6 1/2							CDaaM630P1YA7165.0
	168.3	R 6								CDaaM630P1YA7168.3
A8	168.3	R 6		335	265	135	314	3	120	CDaaM630P1YA8168.3
	177.8		7							CDaaM630P1YA8177.8
	193.7		7 5/8							CDaaM630P1YA8193.7
	216		8 1/2							CDaaM630P1YA8216.0
	219.1	R 8								CDaaM630P1YA8219.1
A9	219.1	R 8		470	395	205	459	8	160	CDaaM630P1YA9219.1
	244.5									CDaaM630P1YA9244.5
	273	R 10								CDaaM630P1YA9273.0
	323.9	R 12								CDaaM630P1YA9323.9
A10	355.6	R 14		630	534	265	579	18	180	CDaaM630P1YA0355.6
	406.4	R 16								CDaaM630P1YA0406.4

Gövde Malzemesi Clamp Body Material		Metal + Kaplama Tipi Metal + Surface Finishing		Vida Tipi Thread Type	
A	Alüminyum / Aluminum	0	Kaplamasız / Uncoated	C	UNC
N	Polyamid / Polyamide	1	Fosfat / Phosphated / Fe/Znph	F	UNF
T	TPE	3	Galvaniz / Galvanized / Fe/Zn 8C Cr3-B	M	Metrik / Metric
P	Polipropilen / Polypropylene	4	CrNi 304 AISI 304	W	Whitworth
		6	CrNi 316 AISI 316		
		9	Çinko Nikel / Zinc Nickel Fe/ZnNi		

Farklı malzeme talepleriniz için lütfen LMC Makina'ya danışınız.

For different material request please consult LMC Makina.

Kelepçe Gövdesi / Clamp Body — 32

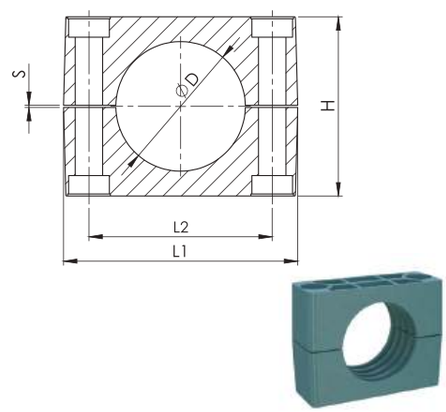

Alt Plaka / Weld Plate — 33

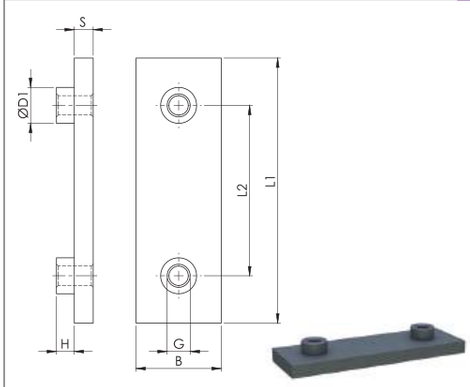

C	2	P	1	Y	A	1	X	X	X	.	X
		Gövde Malzemesi Clamp Body Material	Gövde Tipi Clamp Body Design	Gövde Renk Clamp Body Colour	Grup Group		Ölçü Size				

C	A	0	0	M	1	A	1
				Vida Tipi Thread Type	Metal + Kaplama Tipi Metal + Surface Finishing	Grup Group	

Grup Group	Dış Çap (ØD) O.D. of Pipe / Tube/Hose mm	Anma Çapı (R) Boru Diş Nominal Bore Pipe inch	Dış Çap (ØD) O.D. of Pipe / Tube/Hose inch	Ölçü Tablosu Dimension Table L1	L2	H	S min.	Genişlik Width	Sipariş Kodu Order Code	Ölçü Tablosu Dimension Table L1	L2	H	S	G	B	ØD1	Sipariş Kodu Order Code
A1	6			55	33	32	0.6	30	C2P1YA1006.0	74	33	8	8	M10 3/8-16 UNC	30	17	CA00M1A1
	6.4		1/4						C2P1YA1006.4								
	8		5/16						C2P1YA1008.0								
	9.5		3/8						C2P1YA1009.5								
	10	R 1/8							C2P1YA1010.0								
	12								C2P1YA1012.0								
	12.7		1/2						C2P1YA1012.7								
	13.5	R 1/4							C2P1YA1013.5								
	14								C2P1YA1014.0								
	15								C2P1YA1015.0								
	16		5/8						C2P1YA1016.0								
	17.2	R 3/8							C2P1YA1017.2								
	18								C2P1YA1018.0								
A2	19		3/4	70	45	48	0.6	30	C2P1YA2019.0	86	45	8	8	M10 3/8-16 UNC	30	17	CA00M1A2
	20								C2P1YA2020.0								
	21.3	R 1/2							C2P1YA2021.3								
	22		7/8						C2P1YA2022.0								
	25								C2P1YA2025.0								
	25.4		1						C2P1YA2025.4								
	26.9	R 3/4							C2P1YA2026.9								
	28								C2P1YA2028.0								
	30								C2P1YA2030.0								
A3	30			85	60	60	0.6	30	C2P1YA3030.0	100	60	8	8	M10 3/8-16 UNC	30	17	CA00M1A3
	32		1 1/4						C2P1YA3032.0								
	33.7	R 1							C2P1YA3033.7								
	35								C2P1YA3035.0								
	38		1 1/2						C2P1YA3038.0								
	40								C2P1YA3040.0								
	42	R 1 1/4							C2P1YA3042.0								
A4	38		1 1/2	115	90	89	2	45	C2P1YA4038.0	140	90	8	10	M12 7/16-14 UNC	45	19	CA00M1A4
	42								C2P1YA4042.0								
	44.5		1 3/4						C2P1YA4044.5								
	48.3	R 1 1/2							C2P1YA4048.3								
	50.8		2						C2P1YA4050.8								
	55								C2P1YA4055.0								
	57		2 1/4						C2P1YA4057.0								
	60.3	R 2							C2P1YA4060.3								
	63.5		2 1/2						C2P1YA4063.5								
	65								C2P1YA4065.0								
	70		2 3/4						C2P1YA4070.0								

Gövde Malzemesi Clamp Body Material		Metal + Kaplama Tipi Metal + Surface Finishing		Vida Tipi Thread Type	
A	Alüminyum / Aluminum	0	Kaplamasız / Uncoated	C	UNC
N	Polyamid / Polyamide	1	Fosfat / Phosphated / Fe/Znph	F	UNF
T	TPE	3	Galvaniz / Galvanized / Fe/Zn 8C Cr3-B	M	Metrik / Metric
P	Polipropilen / Polypropylene	4	CrNi 304 AISI 304	W	Whitworth
		6	CrNi 316 AISI 316		
		9	Çinko Nikel / Zinc Nickel Fe/ZnNi		

Farklı malzeme talepleriniz için lütfen LMC Makina'ya danışınız.

For different material request please consult LMC Makina.

Kelepçe Gövdesi / Clamp Body **32**

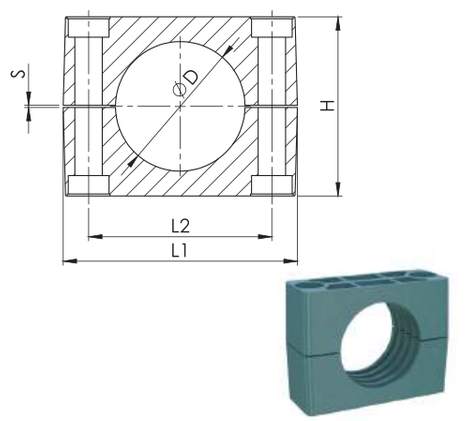

Alt Plaka / Weld Plate **33**

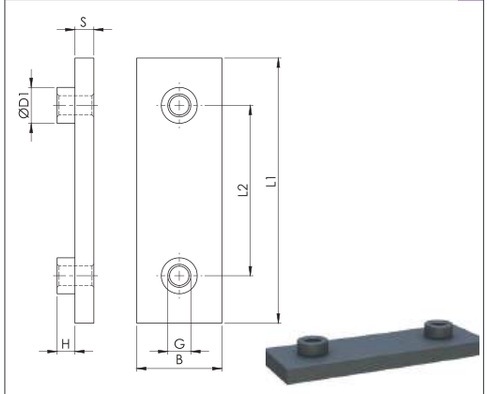

C	2	P	1	Y	A	1	X	X	X	.	X
		Gövde Malzemesi Clamp Body Material	Gövde Tipi Clamp Body Design	Gövde Renk Clamp Body Colour	Grup Group		Ölçü Size				

C	A	0	0	M	1	A	1
				Vida Tipi Thread Type	Metal + Kaplama Tipi Metal + Surface Finishing	Grup Group	

Grup Group	Dış Çap (ØD) O.D. of Pipe / Tube/Hose mm	Anma Çapı (R) Boru Diş Nominal Bore Pipe inch	Dış Çap (ØD) O.D. of Pipe / Tube/Hose inch	Ölçü Tablosu Dimension Table L1	L2	H	S min.	Genişlik Width	Sipariş Kodu Order Code	Ölçü Tablosu Dimension Table L1	L2	H	S	G	B	ØD1	Sipariş Kodu Order Code
A5	65			154	122	120	2	60	C2P1YA5065.0	180	122	12	10	M16 5/8-11 UNC	60	24	CA00M1A5
	70								C2P1YA5070.0								
	73	R 2 1/2 except DIN EN 10220	2 7/8						C2P1YA5073.0								
	76.1	R 2 1/2 only DIN EN 10220	3						C2P1YA5076.1								
	80								C2P1YA5080.0								
	82.5		3 1/4						C2P1YA5082.5								
	88.9	R 3	3 1/2						C2P1YA5088.9								
A6	88.9	R 3	3 1/2	206	168	168	2	80	C2P1YA6088.9	226	168	18	15	M20 3/4-10 UNC	80	30	CA00M1A6
	100								C2P1YA6100.0								
	101.6	R 3 1/2							C2P1YA6101.6								
	108		4 1/4						C2P1YA6108.0								
	114.3	R 4							C2P1YA6114.3								
	127		5						C2P1YA6127.0								
	133		5 1/4						C2P1YA6133.0								
A7	133			251	205	200	3	91	C2P1YA7133.0	270	205	21	15	M24 7/8-9 UNC	90	35	CA00M1A7
	139.7	R 5							C2P1YA7139.7								
	152.4		6						C2P1YA7152.4								
	159		6 1/4						C2P1YA7159.0								
	165		6 1/2						C2P1YA7165.0								
	168.3	R 6							C2P1YA7168.3								
A8	168.3	R 6		335	265	270	3	120	C2P1YA8168.3	340	265	21	25	M30 1-1/8-7 UNC	120	45	CA00M1A8
	177.8		7						C2P1YA8177.8								
	193.7		7 5/8						C2P1YA8193.7								
	216		8 1/2						C2P1YA8216.0								
	219.1	R 8							C2P1YA8219.1								
A9	219.1	R 8		470	395	410	8	162	C2P1YA9219.1	520	395	38	30	M30 1-1/8-7 UNC	160	50	CA00M1A9
	244.5								C2P1YA9244.5								
	273	R 10							C2P1YA9273.0								
	323.9	R 12							C2P1YA9323.9								
A10	355.6	R 14		630	534	530	18	182	C2P1YA0355.6	680	534	38	30	M30 1-1/8-7 UNC	180	50	CA00M1A0
	406.4	R 16							C2P1YA0406.4								

Metal + Kaplama Tipi Metal + Surface Finishing		Vida Tipi Thread Type	
0	Kaplamasız / Uncoated	C	UNC
1	Fosfat / Phosphated / Fe/Znph	F	UNF
3	Galvaniz / Galvanized / Fe/Zn 8C Cr3-B	M	Metrik / Metric
4	CrNi 304 AISI 304	W	Whitworth
6	CrNi 316 AISI 316		
9	Çinko Nikel / Zinc Nickel Fe/ZnNi		

Farklı malzeme talepleriniz için lütfen LMC Makina'ya danışınız.

For different material request please consult LMC Makina.

Üst Plaka
Cover Plate

34

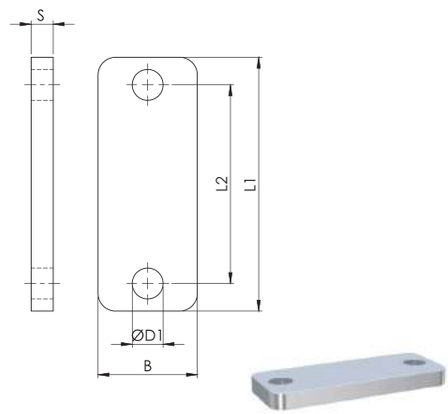

C	U	0	0	T	3	A	1
					Metal + Kaplama Tipi Metal + Surface Finishing		Grup Group

Montaj Delikli Alt Plaka
Elongated Weld Plate

35

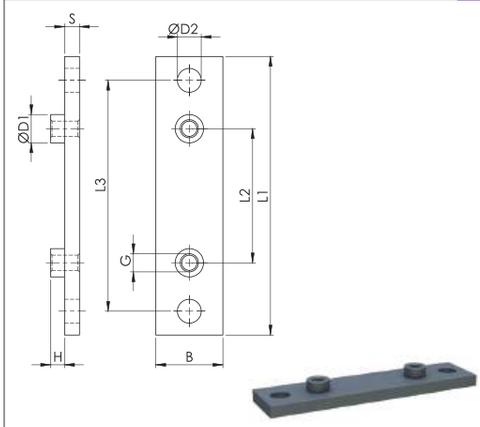

C	A	0	1	M	1	A	1
				Vida Tipi Thread Type	Metal + Kaplama Tipi Metal + Surface Finishing		Grup Group

Grup Group	Dış Çap (ØD) O.D. of Pipe / Tube/Hose mm	Anma Çapı (R) Boru Diş Nominal Bore Pipe inch	Dış Çap (ØD) O.D. of Pipe / Tube/Hose inch	Ölçü Tablosu Dimension Table L1	L2	B	S	ØD1	Sipariş Kodu Order Code	Ölçü Tablosu Dimension Table L1	L2	L3	H	S	G	B	ØD1	ØD2	Sipariş Kodu Order Code
A1	6			55	33	30	8	11	CU00T3A1	113	33	85	8	8	M10 3/8-16 UNC	30	18	13	CA01M1A1
	6.4		1/4																
	8		5/16																
	9.5		3/8																
	10	R 1/8																	
	12																		
	12.7		1/2																
	13.5	R 1/4																	
	14																		
	15																		
	16		5/8																
	17.2	R 3/8																	
	18																		
A2	19		3/4	70	45	30	8	11	CU00T3A2	125	45	97	8	8	M10 3/8-16 UNC	30	18	13	CA01M1A2
	20																		
	21.3	R 1/2																	
	22		7/8																
	25																		
	25.4		1																
	26.9	R 3/4																	
	28																		
	30																		
A3	30			85	60	30	8	11	CU00T3A3	140	60	112	8	8	M10 3/8-16 UNC	30	18	13	CA01M1A3
	32		1 1/4																
	33.7	R 1																	
	35																		
	38		1 1/2																
	40																		
	42	R 1 1/4																	
A4	38		1 1/2	115	90	45	10	14	CU00T3A4	187	90	155	8	10	M12 7/16-14 UNC	45	20	16	CA01M1A4
	42																		
	44.5		1 3/4																
	48.3	R 1 1/2																	
	50.8		2																
	55																		
	57		2 1/4																
	60.3	R 2																	
	63.5		2 1/2																
	65																		
	70		2 3/4																

Metal + Kaplama Tipi Metal + Surface Finishing		Vida Tipi Thread Type	
0	Kaplamasız / Uncoated	C	UNC
1	Fosfat / Phosphated / Fe/Znph	F	UNF
3	Galvaniz / Galvanized / Fe/Zn 8C Cr3-B	M	Metrik / Metric
4	CrNi 304 AISI 304	W	Whitworth
6	CrNi 316 AISI 316		
9	Çinko Nikel / Zinc Nickel Fe/ZnNi		

Farklı malzeme talepleriniz için lütfen LMC Makina'ya danışınız.

For different material request please consult LMC Makina.

Üst Plaka
Cover Plate **34**

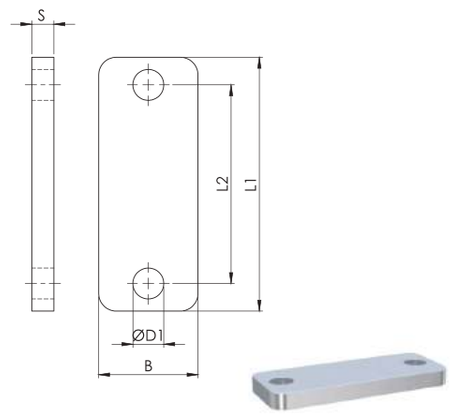

C	U	0	0	T	3	A	1
					Metal + Kaplama Tipi Metal + Surface Finishing		Grup Group

Montaj Delikli Alt Plaka
Elongated Weld Plate **35**

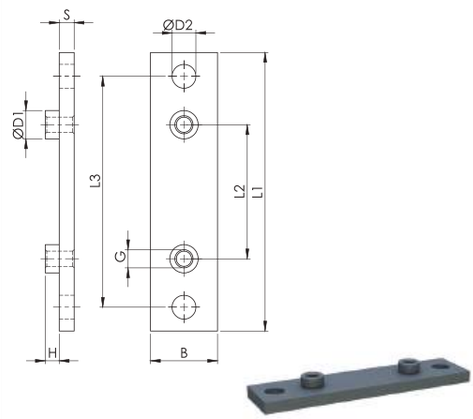

C	A	0	1	M	1	A	1
				Vida Tipi Thread Type	Metal + Kaplama Tipi Metal + Surface Finishing		Grup Group

Grup Group	Dış Çap (ØD) O.D. of Pipe / Tube/Hose mm	Anma Çapı (R) Boru Diş Nominal Bore Pipe inch	Dış Çap (ØD) O.D. of Pipe / Tube/Hose inch	Ölçü Tablosu Dimension Table L1	L2	B	S	ØD1	Sipariş Kodu Order Code
A5	65			152	122	60	10	19	CU00T3A5
	70								
	73	R 2 1/2	2 7/8						
	76.1	R 2 1/2	3						
	80								
	82.5		3 1/4						
	88.9	R 3	3 1/2						
A6	88.9	R 3	3 1/2	206	168	80	15	22	CU00T3A6
	100								
	101.6	R 3 1/2							
	108		4 1/4						
	114.3	R 4							
	127		5						
	133		5 1/4						
A7	133			251	205	90	15	26	CU00T3A7
	139.7	R 5							
	152.4		6						
	159		6 1/4						
	165		6 1/2						
	168.3	R 6							
A8	168.3	R 6		340	265	120	25	35	CU00T3A8
	177.8		7						
	193.7		7 5/8						
	216		8 1/2						
	219.1	R 8							
A9	219.1	R 8		470	395	160	30	35	CU00T3A9
	244.5								
	273	R 10							
	323.9	R 12							
A10	355.6	R 14		630	534	180	30	35	CU00T3A0
	406.4	R 16							

Ölçü Tablosu Dimension Table L1	L2	L3	H	S	G	B	ØD1	ØD2	Sipariş Kodu Order Code
238	122	198	12	10	M16 5/8-11 UNC	60	24	21	CA01M1A5
309	168	259	18	15	M20 3/4-10 UNC	80	30	26	CA01M1A6
370	205	310	21	15	M24 7/8-9 UNC	90	35	31	CA01M1A7
440	265	380	21	25	M30 1-1/8-7 UNC	120	45	31	CA01M1A8
590	395	530	38	30	M30 1-1/8-7 UNC	160	50	31	CA01M1A9
750	534	690	38	30	M30 1-1/8-7 UNC	180	50	31	CA01M1A0

Metal + Kaplama Tipi Metal + Surface Finishing		Vida Tipi Thread Type	
0	Kaplamasız / Uncoated	C	UNC
1	Fosfat / Phosphated / Fe/Znph	F	UNF
3	Galvaniz / Galvanized / Fe/Zn 8C Cr3-B	M	Metrik / Metric
4	CrNi 304 AISI 304	W	Whitworth
6	CrNi 316 AISI 316		
9	Çinko Nikel / Zinc Nickel Fe/ZnNi		

Farklı malzeme talepleriniz için lütfen LMC Makina'ya danışınız.

For different material request please consult LMC Makina.

Sırt Sırta Kelepçe için Alt Plaka
Weld Plate for Double Clamps **36**

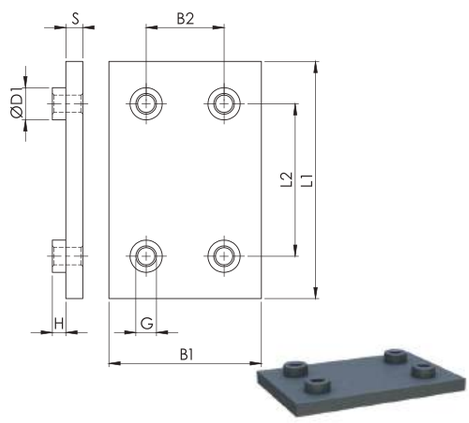

C	A	2	0	M	1	A	1
				Vida Tipi Thread Type	Metal + Kaplama Tipi Metal + Surface Finishing	Grup Group	

Sırt Sırta Kelepçe için Montaj Delikli Alt Plaka
Elongated Weld Plate for Double Clamps **37**

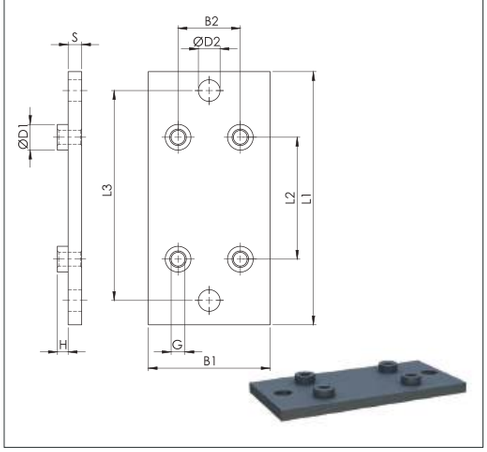

C	A	2	1	M	1	A	1
				Vida Tipi Thread Type	Metal + Kaplama Tipi Metal + Surface Finishing	Grup Group	

Grup Group	Dış Çap (ØD) O.D. of Pipe / Tube/Hose mm	Anma Çapı (R) Boru Diş Nominal Bore Pipe inch	Dış Çap (ØD) O.D. of Pipe / Tube/Hose inch	Ölçü Tablosu Dimension Table L1	L2	B1	B2	H	S	G	ØD1	Sipariş Kodu Order Code
A1	6			74	33	60	31	8	8	M10 3/8-16 UNC	18	CA20M1A1
	6.4		1/4									
	8		5/16									
	9.5		3/8									
	10	R 1/8										
	12											
	12.7		1/2									
	13.5	R 1/4										
	14											
	15											
	16		5/8									
	17.2	R 3/8										
	18											
A2	19		3/4	86	45	60	31	8	8	M10 3/8-16 UNC	18	CA20M1A2
	20											
	21.3	R 1/2										
	22		7/8									
	25											
	25.4		1									
	26.9	R 3/4										
	28											
	30											
A3	30			100	60	60	31	8	8	M10 3/8-16 UNC	18	CA20M1A3
	32		1 1/4									
	33.7	R 1										
	35											
	38		1 1/2									
	40											
	42	R 1 1/4										
A4	38		1 1/2	140	90	90	46	8	10	M12 7/16-14 UNC	20	CA20M1A4
	42											
	44.5		1 3/4									
	48.3	R 1 1/2										
	50.8		2									
	55											
	57		2 1/4									
	60.3	R 2										
	63.5		2 1/2									
	65											
	70		2 3/4									

Grup Group	Dış Çap (ØD) O.D. of Pipe / Tube/Hose mm	Anma Çapı (R) Boru Diş Nominal Bore Pipe inch	Dış Çap (ØD) O.D. of Pipe / Tube/Hose inch	Ölçü Tablosu Dimension Table L1	L2	L3	B1	B2	H	S	G	ØD1	ØD2	Sipariş Kodu Order Code
A1	6			113	33	85	60	31	8	8	M10 3/8-16 UNC	18	13	CA21M1A1
	6.4		1/4											
	8		5/16											
	9.5		3/8											
	10	R 1/8												
	12													
	12.7		1/2											
	13.5	R 1/4												
	14													
	15													
	16		5/8											
	17.2	R 3/8												
	18													
A2	19		3/4	125	45	97	60	31	8	8	M10 3/8-16 UNC	18	13	CA21M1A2
	20													
	21.3	R 1/2												
	22		7/8											
	25													
	25.4		1											
	26.9	R 3/4												
	28													
	30													
A3	30			140	60	112	60	31	8	8	M10 3/8-16 UNC	18	13	CA21M1A3
	32		1 1/4											
	33.7	R 1												
	35													
	38		1 1/2											
	40													
	42	R 1 1/4												
A4	38		1 1/2	187	90	155	90	46	8	10	M12 7/16-14 UNC	20	16	CA21M1A4
	42													
	44.5		1 3/4											
	48.3	R 1 1/2												
	50.8		2											
	55													
	57		2 1/4											
	60.3	R 2												
	63.5		2 1/2											
	65													
	70		2 3/4											

Metal + Kaplama Tipi Metal + Surface Finishing		Vida Tipi Thread Type	
0	Kaplamasız / Uncoated	C	UNC
1	Fosfat / Phosphated / Fe/Znph	F	UNF
3	Galvaniz / Galvanized / Fe/Zn 8C Cr3-B	M	Metrik / Metric
4	CrNi 304 AISI 304	W	Whitworth
6	CrNi 316 AISI 316		
9	Çinko Nikel / Zinc Nickel Fe/ZnNi		

Farklı malzeme talepleriniz için lütfen LMC Makina'ya danışınız.

For different material request please consult LMC Makina.

Sırt Sırta Kelepçe için Alt Plaka 36
Weld Plate for Double Clamps

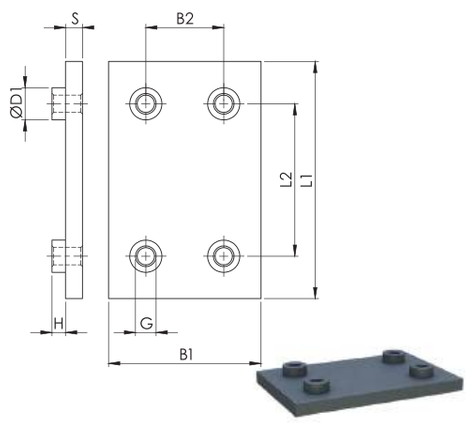

C A 2 0 M 1 A 1

Vida Tipi / Thread Type — Metal + Kaplama Tipi / Metal + Surface Finishing — Grup / Group

Sırt Sırta Kelepçe için Montaj Delikli Alt Plaka 37
Elongated Weld Plate for Double Clamps

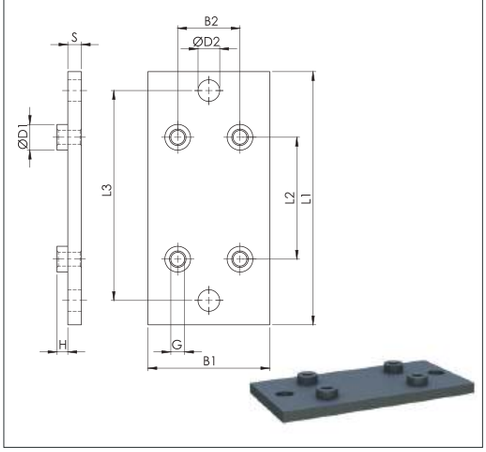

C A 2 1 M 1 A 1

Vida Tipi / Thread Type — Metal + Kaplama Tipi / Metal + Surface Finishing — Grup / Group

Grup Group	Dış Çap (ØD) O.D. of Pipe / Tube/Hose mm	Anma Çapı (R) Boru Diş Nominal Bore Pipe inch	Dış Çap (ØD) O.D. of Pipe / Tube/Hose inch
A5	65		
	70		
	73	R 2 1/2 except DIN EN 10220	2 7/8
	76.1	R 2 1/2 only DIN EN 10220	3
	80		
	82.5		3 1/4
	88.9	R 3	3 1/2
A6	88.9	R 3	3 1/2
	100		
	101.6	R 3 1/2	
	108		4 1/4
	114.3	R 4	
	127		5
	133		5 1/4
A7	133		5 1/4
	139.7	R 5	
	152.4		6
	159		6 1/4
	165		6 1/2
	168.3	R 6	
A8	168.3	R 6	
	177.8		7
	193.7		7 5/8
	216		8 1/2
	219.1	R 8	
A9	219.1	R 8	
	244.5		
	273	R 10	
	323.9	R 12	
A10	355.6	R 14	
	406.4	R 16	

Ölçü Tablosu Dimension Table								Sipariş Kodu Order Code
L1	L2	B1	B2	H	S	G	ØD1	
180	122	120	61	12	10	M16 5/8-11 UNC	24	CA20M1A5
226	168	160	81	18	15	M20 3/4-10 UNC	30	CA20M1A6
270	205	182	93	21	15	M24 7/8-9 UNC	35	CA20M1A7
340	265	240	122	21	25	M30 1-1/8-7 UNC	45	CA20M1A8
520	395	324	166	38	30	M30 1-1/8-7 UNC	50	CA20M1A9
680	534	364	186	38	30	M30 1-1/8-7 UNC	50	CA20M1A0

Ölçü Tablosu Dimension Table									Sipariş Kodu Order Code
L1	L2	L3	B1	B2	H	S	G	ØD1	ØD2	
238	122	198	120	61	12	10	M16 5/8-11 UNC	24	21	CA21M1A5
309	168	259	160	81	18	15	M20 3/4-10 UNC	30	26	CA21M1A6
370	205	310	182	93	21	15	M24 7/8-9 UNC	35	31	CA21M1A7
440	265	380	240	124	21	25	M30 1-1/8-7 UNC	45	31	CA21M1A8
590	395	530	326	166	38	30	M30 1-1/8-7 UNC	50	31	CA21M1A9
750	534	690	364	186	38	30	M30 1-1/8-7 UNC	50	31	CA21M1A0

Metal + Kaplama Tipi Metal + Surface Finishing		Vida Tipi Thread Type	
0	Kaplamasız / Uncoated	C	UNC
1	Fosfat / Phosphated / Fe/Znph	F	UNF
3	Galvaniz / Galvanized / Fe/Zn 8C Cr3-B	M	Metrik / Metric
4	CrNi 304 AISI 304	W	Whitworth
6	CrNi 316 AISI 316		
9	Çinko Nikel / Zinc Nickel Fe/ZnNi		

Farklı malzeme talepleriniz için lütfen LMC Makina'ya danışınız.

For different material request please consult LMC Makina.

Sırt Sırta Kelepçe için Üst Plaka
Cover Plate for Double Clamps

38

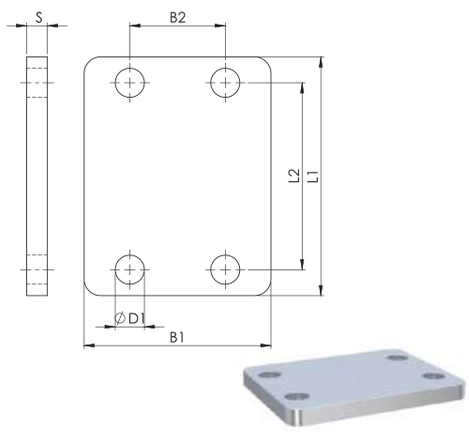

C	U	2	0	T	3	A	1
					Metal + Kaplama Tipi Metal + Surface Finishing		Grup Group

Ara Bağlantı Plakası
Safety Locking Plate

39

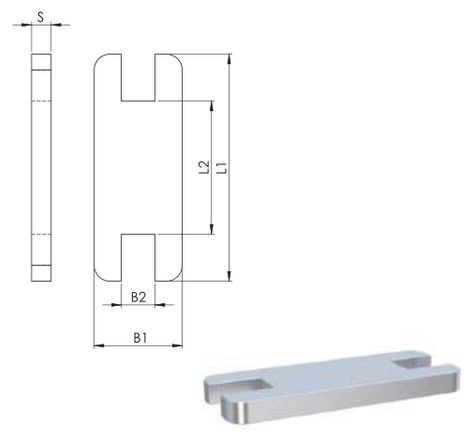

C	H	0	0	T	3	A	1
					Metal + Kaplama Tipi Metal + Surface Finishing		Grup Group

Grup Group	Dış Çap (ØD) O.D. of Pipe / Tube/Hose mm	Anma Çapı (R) Boru Diş Nominal Bore Pipe inch	Dış Çap (ØD) O.D. of Pipe / Tube/Hose inch	Ölçü Tablosu Dimension Table L1	L2	B1	B2	S	ØD1	Sipariş Kodu Order Code	Ölçü Tablosu Dimension Table L1	L2	B1	B2	S	Sipariş Kodu Order Code
A1	6			55	33	60	31	8	11	CU20T3A1	56	13.5	30	15	8	CH00T3A1
	6.4		1/4													
	8		5/16													
	9.5		3/8													
	10	R 1/8														
	12															
	12.7		1/2													
	13.5	R 1/4														
	14															
	15															
	16		5/8													
	17.2	R 3/8														
	18															
A2	19		3/4	70	45	60	31	8	11	CU20T3A2	70	25	30	15	8	CH00T3A2
	20															
	21.3	R 1/2														
	22		7/8													
	25															
	25.4		1													
	26.9	R 3/4														
	28															
	30															
A3	30			85	60	60	31	8	11	CU20T3A3	85	40	30	15	8	CH00T3A3
	32		1 1/4													
	33.7	R 1														
	35															
	38		1 1/2													
	40															
	42	R 1 1/4														
A4	38		1 1/2	115	90	90	46	10	14	CU20T3A4	116	68	45	17	10	CH00T3A4
	42															
	44.5		1 3/4													
	48.3	R 1 1/2														
	50.8		2													
	55															
	57		2 1/4													
	60.3	R 2														
	63.5		2 1/2													
	65															
	70		2 3/4													

Metal + Kaplama Tipi Metal + Surface Finishing	
0	Kaplamasız / Uncoated
1	Fosfat / Phosphated / Fe/Znph
3	Galvaniz / Galvanized / Fe/Zn 8C Cr3-B
4	CrNi 304 / AISI 304
6	CrNi 316 / AISI 316
9	Çinko Nikel / Zinc Nickel - Fe/ZnNi

Farklı malzeme talepleriniz için lütfen LMC Makina'ya danışınız.

For different material request please consult LMC Makina.

Sırt Sırta Kelepçe için Üst Plaka
Cover Plate for Double Clamps **38**

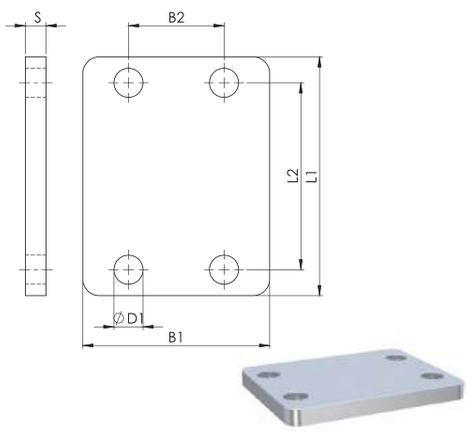

C	U	2	0	T	3	A	1
					Metal + Kaplama Tipi Metal + Surface Finishing	Grup Group	

Ara Bağlantı Plakası
Safety Locking Plate **39**

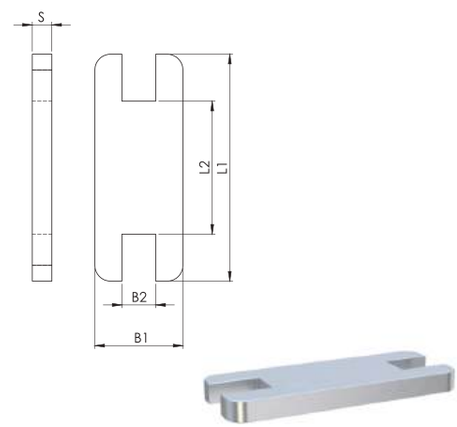

C	H	0	0	T	3	A	1
					Metal + Kaplama Tipi Metal + Surface Finishing	Grup Group	

Grup Group	Dış Çap (ØD) O.D. of Pipe / Tube/Hose mm	Anma Çapı (R) Boru Diş Nominal Bore Pipe inch	Dış Çap (ØD) O.D. of Pipe / Tube/Hose inch	Ölçü Tablosu Dimension Table L1	L2	B1	B2	S	ØD1	Sipariş Kodu Order Code	Ölçü Tablosu Dimension Table L1	L2	B1	B2	S	Sipariş Kodu Order Code
A5	65			152	122	120	61	10	19	CU20T3A5	153	97	60	21	10	CH00T3A5
	70															
	73	R 2 1/2	2 7/8													
	76.1	R 2 1/2	3													
	80															
	82.5		3 1/4													
	88.9	R 3	3 1/2													
A6	88.9	R 3	3 1/2	206	168	160	81	15	22	CU20T3A6	206	130	80	27	15	CH00T3A6
	100															
	101.6	R 3 1/2														
	108		4 1/4													
	114.3	R 4														
	127		5													
	133		5 1/4													
A7	133			251	205	182	93	15	26	CU20T3A7	251	166	90	30	15	CH00T3A7
	139.7	R 5														
	152.4		6													
	159		6 1/4													
	165		6 1/2													
	168.3	R 6														
A8	168.3	R 6		320	265	240	122	25	35	CU20T3A8	325	205	120	49	25	CH00T3A8
	177.8		7													
	193.7		7 5/8													
	216		8 1/2													
	219.1	R 8														
A9	219.1	R 8		470	395	324	166	30	35	CU20T3A9						
	244.5															
	273	R 10														
	323.9	R 12														
A10	355.6	R 14		630	534	364	186	30	35	CU20T3A0						
	406.4	R 16														

Metal + Kaplama Tipi Metal + Surface Finishing		Vida Tipi Thread Type	
0	Kaplamasız / Uncoated	C	UNC
1	Fosfat / Phosphated / Fe/Znph	F	UNF
3	Galvaniz / Galvanized / Fe/Zn 8C Cr3-B	M	Metrik / Metric
4	CrNi 304 AISI 304	W	Whitworth
6	CrNi 316 AISI 316		
9	Çinko Nikel / Zinc Nickel Fe/ZnNi		

Farklı malzeme talepleriniz için lütfen LMC Makina'ya danışınız.

For different material request please consult LMC Makina.

Altıköşe Başlı Cıvata
Hexagon Head Bolt **40**

DIN 931 / 933 - ISO 4014

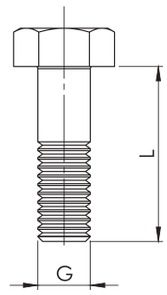

C	C	A	M	3	0	1	0	0	4	5
			Vida Tipi Thread Type	Metal + Kaplama Tipi Metal + Surface Finishing	Vida Ölçüsü Screw-Bolt Size			Cıvata Boyu Screw-Bolt Length		

Ara Bağlantı Cıvatası
Stacking Bolt **41**

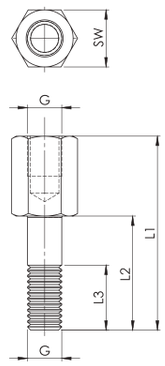

C	C	B	M	3	0	1	0	0	2	4
			Vida Tipi Thread Type	Metal + Kaplama Tipi Metal + Surface Finishing	Vida Ölçüsü Screw-Bolt Size			Cıvata Boyu Screw-Bolt Length		

Grup Group	Dış Çap (ØD) O.D. of Pipe / Tube/Hose mm	Anma Çapı (R) Boru Diş Nominal Bore Pipe inch	Dış Çap (ØD) O.D. of Pipe / Tube/Hose inch	Ölçü Tablosu Dimension Table GxL	Sipariş Kodu Order Code	Ölçü Tablosu Dimension Table L1	L2	L3 min.	G	SW	Sipariş Kodu Order Code
A1	6			M10x45 3/8-16 UNC x 1-3/4	CCAM3010045 CCAC3012045	49	24	15	M10 3/8-16 UNC	15	CCBM3010024 CCBC3012024
	6.4		1/4								
	8		5/16								
	9.5		3/8								
	10	R 1/8									
	12										
	12.7		1/2								
	13.5	R 1/4									
	14										
	15										
	16		5/8								
	17.2	R 3/8									
	18										
A2	19		3/4	M10x60 3/8-16 UNC x 2-1/4	CCAM3010060 CCAC3012060	65	40	15	M10 3/8-16 UNC	15	CCBM3010040 CCBC3012040
	20										
	21.3	R 1/2									
	22		7/8								
	25										
	25.4		1								
	26.9	R 3/4									
	28										
	30										
A3	30			M10x70 3/8-16 UNC x 2-3/4	CCAM3010070 CCAC3012070	74	50	15	M10 3/8-16 UNC	15	CCBM3010050 CCBC3012050
	32		1 1/4								
	33.7	R 1									
	35										
	38		1 1/2								
	40										
	42	R 1 1/4									
A4	38		1 1/2	M12x100 7/6-14 UNC x 4	CCAM3012100 CCAC3014100	108	81	18	M12 7/16-14 UNC	17	CCBM3012081 CCBC3014081
	42										
	44.5		1 3/4								
	48.3	R 1 1/2									
	50.8		2								
	55										
	57		2 1/4								
	60.3	R 2									
	63.5		2 1/2								
	65										
	70		2 3/4								

Metal + Kaplama Tipi Metal + Surface Finishing		Vida Tipi Thread Type	
0	Kaplamasız / Uncoated	C	UNC
1	Fosfat / Phosphated / Fe/Znph	F	UNF
3	Galvaniz / Galvanized / Fe/Zn 8C Cr3-B	M	Metrik / Metric
4	CrNi 304 AISI 304	W	Whitworth
6	CrNi 316 AISI 316		
9	Çinko Nikel / Zinc Nickel Fe/ZnNi		

Farklı malzeme talepleriniz için lütfen LMC Makina'ya danışınız.

For different material request please consult LMC Makina.

Altıköşe Başlı Cıvata
Hexagon Head Bolt **40**

DIN 931 / 933 - ISO 4014

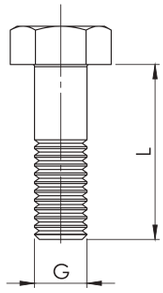

C	C	A	M	3	0	1	0	0	4	5
			Vida Tipi Thread Type	Metal + Kaplama Tipi Metal + Surface Finishing		Vida Ölçüsü Screw-Bolt Size			Cıvata Boyu Screw-Bolt Length	

Ara Bağlantı Cıvatası
Stacking Bolt **41**

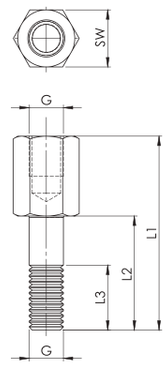

C	C	B	M	3	0	1	0	0	2	4
			Vida Tipi Thread Type	Metal + Kaplama Tipi Metal + Surface Finishing		Vida Ölçüsü Screw-Bolt Size			Cıvata Boyu Screw-Bolt Length	

Grup Group	Dış Çap (ØD) O.D. of Pipe / Tube/Hose mm	Anma Çapı (R) Boru Diş Nominal Bore Pipe inch	Dış Çap (ØD) O.D. of Pipe / Tube/Hose inch
A5	65		
	70		
	73	R 2 1/2 except DIN EN 10220	2 7/8
	76.1	R 2 1/2 only DIN EN 10220	3
	80		
	82.5		3 1/4
	88.9	R 3	3 1/2
A6	88.9	R 3	3 1/2
	100		
	101.6	R 3 1/2	
	108		4 1/4
	114.3	R 4	
	127		5
	133		5 1/4
A7	133		
	139.7	R 5	
	152.4		6
	159		6 1/4
	165		6 1/2
	168.3	R 6	
A8	168.3	R 6	
	177.8		7
	193.7		7 5/8
	216		8 1/2
	219.1	R 8	
A9	219.1	R 8	
	244.5		
	273	R 10	
	323.9	R 12	
A10	355.6	R 14	
	406.4	R 16	

Ölçü Tablosu Dimension Table GxL	Sipariş Kodu Order Code
M16x130 5/8-11 UNC x 5-1/4	CCAM3016130 CCAC3020130
M20x190 3/4-10 UNC x 7-1/2	CCAM3020190 CCAC3024190
M24x220 7/8-9 UNC x 8-3/4	CCAM3024220 CCAC3028220
M30x300 1-1/8-7 UNC x 12	CCAM3030300 CCAC3104300
M30x450 1-1/8-7 UNC x 17-1/2	CCAM3030450 CCAC3104450
M30x560 1-1/8-7 UNC x 22	CCAM3030560 CCAC3104560

Ölçü Tablosu Dimension Table L1	L2	L3 min.	G	SW	Sipariş Kodu Order Code
144	110	24	M16 5/8-11 UNC	21	CCBM3016110 CCBC3020110
200	151	30	M20 3/4-10 UNC	27	CCBM3020151 CCBC3024151
240	180	50	M24 7/8-9 UNC	30	CCBM3024180 CCBC3028180
331	256	62	M30 1-1/8-7 UNC	46	CCBM3030256 CCBC3104256

Metal + Kaplama Tipi Metal + Surface Finishing		Vida Tipi Thread Type	
0	Kaplamasız / Uncoated	C	UNC
1	Fosfat / Phosphated / Fe/Znph	F	UNF
3	Galvaniz / Galvanized / Fe/Zn 8C Cr3-B	M	Metrik / Metric
4	CrNi 304 AISI 304	W	Whitworth
6	CrNi 316 AISI 316		
9	Çinko Nikel / Zinc Nickel Fe/ZnNi		

Farklı malzeme talepleriniz için lütfen LMC Makina'ya danışınız.

For different material request please consult LMC Makina.

Montaj Rayı
Mounting Rail 42

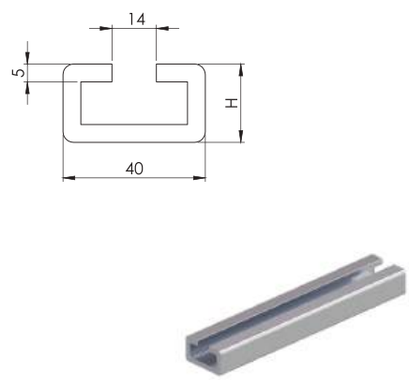

Ray Somunu
Rail Nut 43

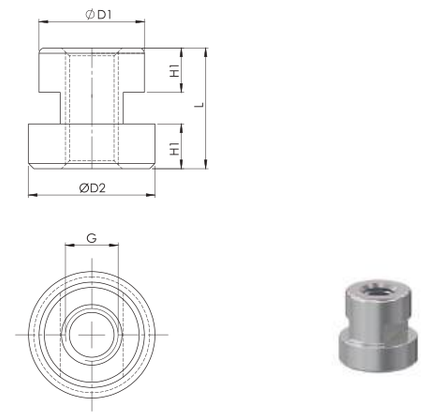

C	R	Y	0	2	2	4	0	1
			Metal + Kaplama Tipi Metal + Surface Finishing	Vida Ölçüsü Screw-Bolt Size				Boy Length

C	R	S	2	M	3	0	1	0
			Tip Type	Vida Tipi Thread Type	Metal + Kaplama Tipi Metal + Surface Finishing	Vida Ölçüsü Screw-Bolt Size		

Grup Group	Dış Çap (ØD) O.D. of Pipe / Tube/Hose mm	Anma Çapı (R) Boru Diş Nominal Bore Pipe inch	Dış Çap (ØD) O.D. of Pipe / Tube/Hose inch	Ölçü Tablosu Dimension Table H	Boy / Lengt	Sipariş Kodu Order Code	Ölçü Tablosu Dimension Table L	H1	ØD1	ØD2	G	Sipariş Kodu Order Code
A1	6			22	1 m 2 m	CRY022401 CRY022402	21	7.5	17.8	24	M10 3/8-16 UNC	CRS2M3010 CRS2C3012
	6.4		1/4									
	8		5/16									
	9.5		3/8									
	10	R 1/8										
	12											
	12.7		1/2									
	13.5	R 1/4										
	14											
	15											
	16		5/8									
	17.2	R 3/8										
	18											
A2	19		3/4									
	20											
	21.3	R 1/2										
	22		7/8									
	25											
	25.4		1									
	26.9	R 3/4										
	28											
	30											
A3	30						23	8.5	19.8	24	M12 7/16-14 UNC	CRS2M3012 CRS2C3014
	32		1 1/4									
	33.7	R 1										
	35											
	38		1 1/2									
	40											
	42	R 1 1/4										
A4	38		1 1/2									
	42											
	44.5		1 3/4									
	48.3	R 1 1/2										
	50.8		2									
	55											
	57		2 1/4									
	60.3	R 2										
	63.5		2 1/2									
	65											
	70		2 3/4									

LMC®

İKİZ SERİ
TWIN SERIES

DIN 3015 / 3

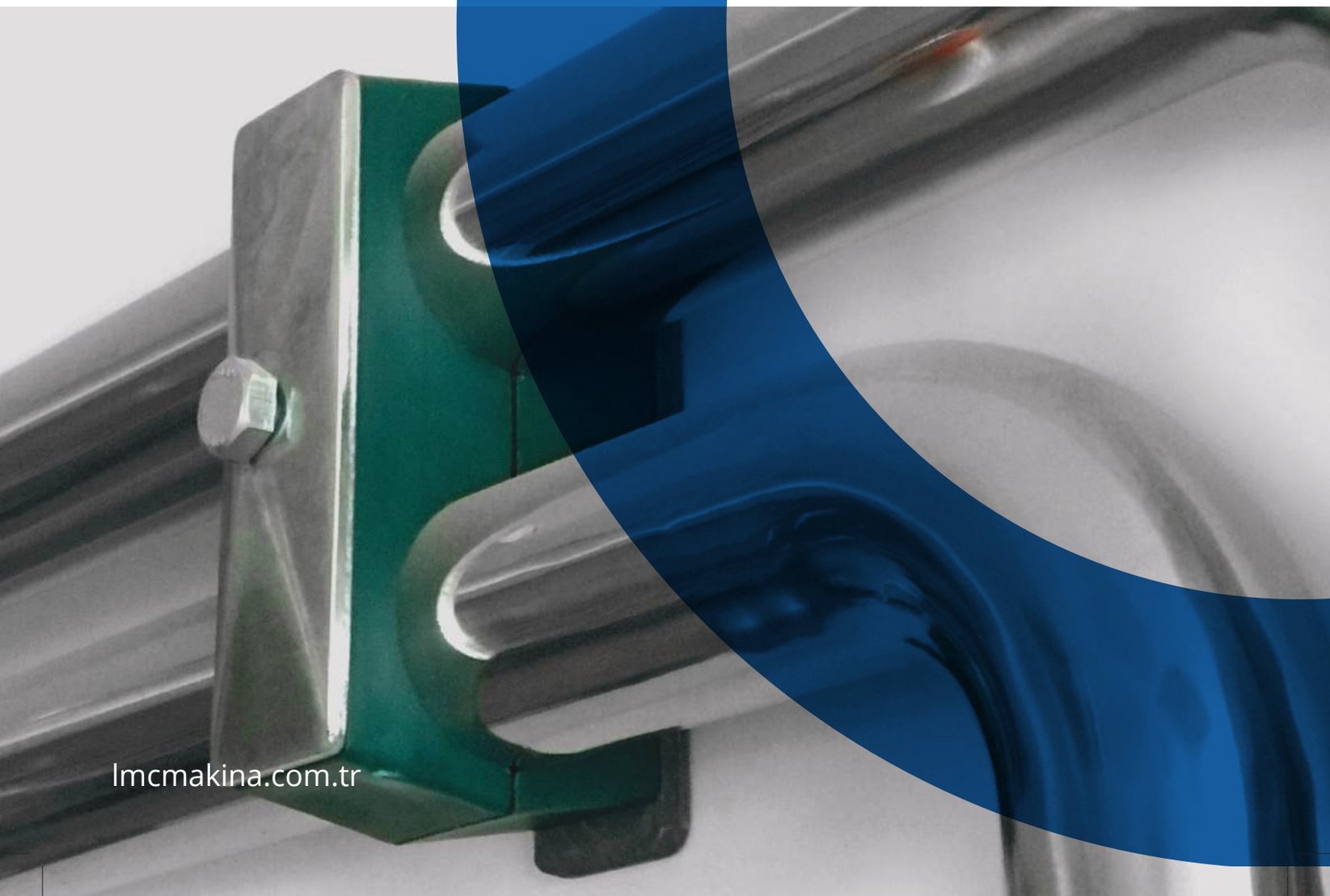

lmcmakina.com.tr

Metal + Kaplama Tipi Metal + Surface Finishing		Gövde Malzemesi Clamp Body Material	
0	Kaplamasız / Uncoated	A	Alüminyum / Aluminum
1	Fosfat / Phosphated / Fe/Znph	N	Polyamid / Polyamide
3	Galvaniz / Galvanized / Fe/Zn 8C Cr3-B	T	TPE
4	CrNi 304 AISI 304	P	Polipropilen / Polypropylene
6	CrNi 316 AISI 316		
9	Çinko Nikel / Zinc Nickel Fe/ZnNi		

Komple Kelepçe
Complete Clamp
44

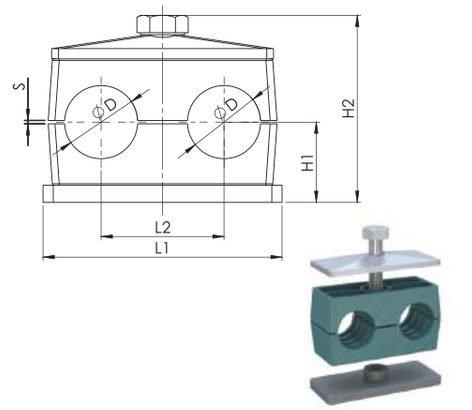

Genişlik / Width: 30 mm

Montaj Delikli Komple Kelepçe
Complete Clamp with Elongated Weld Plate
45

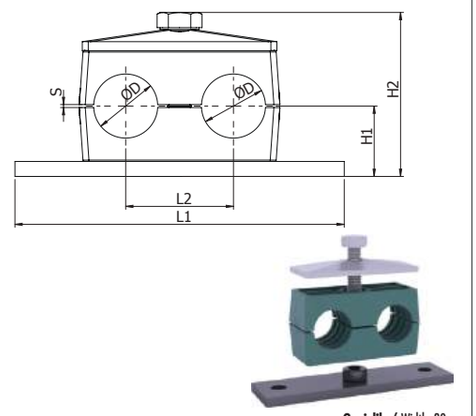

Genişlik / Width: 30 mm

Farklı malzeme talepleriniz için lütfen LMC Makina'ya danışınız.

For different material request please consult LMC Makina.

★ **Düz ve tırtırlı kilitlemeli kelepçe gövdesi için lütfen LMC Makina'ya danışınız.**

Please consult LMC Machinery for smooth and serrated anti-rotary clamp bodies.

C M 4 0 M 1 3 1 P 1 Y I 1 X X X . X

- **Üstlük** Cover Plate
- **Üstlük Kaplama Tipi** Cover Plate Finishing
- **Altlık Kaplama Tipi** Weld Plate Finishing
- **Gövde Malzemesi** Clamp Body Material
- **Gövde Renk** Clamp Body Colour
- **Grup** Group
- **Ölçü** Size

C M 4 1 M 1 3 1 P 1 Y I 1 X X X . X

- **Üstlük** Cover Plate
- **Üstlük Kaplama Tipi** Cover Plate Finishing
- **Altlık Kaplama Tipi** Weld Plate Finishing
- **Gövde Malzemesi** Clamp Body Material
- **Gövde Renk** Clamp Body Colour
- **Grup** Group
- **Ölçü** Size

Grup Group	Dış Çap (ØD) O.D. of Pipe / Tube/Hose mm	Anma Çapı (R) Boru Diş Nominal Bore Pipe inch	Dış Çap (ØD) O.D. of Pipe / Tube/Hose inch	Ölçü Tablosu Dimension Table L1	L2	H1	H2	S min.	Sipariş Kodu Order Code	Ölçü Tablosu Dimension Table L1	L2	H1	H2	S min.	Sipariş Kodu Order Code
I1	6			37	20	16.5	41	0.6	CM40M131P1YI1006.0	64	20	16.5	41	0.5	CM41M131P1YI1006.0
	6.4		1/4						CM40M131P1YI1006.4						CM41M131P1YI1006.4
	8		5/16						CM40M131P1YI1008.0						CM41M131P1YI1008.0
	9.5		3/8						CM40M131P1YI1009.5						CM41M131P1YI1009.5
	10	R 1/8							CM40M131P1YI1010.0						CM41M131P1YI1010.0
	12								CM40M131P1YI1012.0						CM41M131P1YI1012.0
I2	12.7		1/2	55	29	18.5	44.5	0.7	CM40M131P1YI2012.7	85	29	18.5	44.5	0.7	CM41M131P1YI2012.7
	13.5	R 1/4							CM40M131P1YI2013.5						CM41M131P1YI2013.5
	14								CM40M131P1YI2014.0						CM41M131P1YI2014.0
	15								CM40M131P1YI2015.0						CM41M131P1YI2015.0
	16		5/8						CM40M131P1YI2016.0						CM41M131P1YI2016.0
	17.2	R 3/8							CM40M131P1YI2017.2						CM41M131P1YI2017.2
	18								CM40M131P1YI2018.0						CM41M131P1YI2018.0
I3	19		3/4	70	36	23.5	54.5	0.7	CM40M131P1YI3019.0	110	36	23.5	54.5	0.7	CM41M131P1YI3019.0
	20								CM40M131P1YI3020.0						CM41M131P1YI3020.0
	21.3	R 1/2							CM40M131P1YI3021.3						CM41M131P1YI3021.3
	22		7/8						CM40M131P1YI3022.0						CM41M131P1YI3022.0
	23								CM40M131P1YI3023.0						CM41M131P1YI3023.0
	25								CM40M131P1YI3025.0						CM41M131P1YI3025.0
	25.4		1						CM40M131P1YI3025.4						CM41M131P1YI3025.4
I4	26.9	R 3/4		85	45	25.5	58.5	0.7	CM40M131P1YI4026.9	125	45	25.5	58.5	0.7	CM41M131P1YI4026.9
	28								CM40M131P1YI4028.0						CM41M131P1YI4028.8
	30								CM40M131P1YI4030.0						CM41M131P1YI4030.0
I5	32		1 1/4	110	56	32	71.5	0.7	CM40M131P1YI5032.0	150	56	32	71.5	0.7	CM41M131P1YI5032.0
	33.7	R 1							CM40M131P1YI5033.7						CM41M131P1YI5033.7
	35								CM40M131P1YI5035.0						CM41M131P1YI5035.0
	38		1 1/2						CM40M131P1YI5038.0						CM41M131P1YI5038.0
	40								CM40M131P1YI5040.0						CM41M131P1YI5040.0
	42	R 1 1/4							CM40M131P1YI5042.0						CM41M131P1YI5042.0

*** İstek üzerine, ikiz seri boru kelepçelerinin delikleri birbirinden farklı çaplarda da üretilebilmektedir.**

* In twin series pipe clamps, the diameter of each pipe hole can be produced with different sizes upon request.

Metal + Kaplama Tipi Metal + Surface Finishing		Gövde Malzemesi Clamp Body Material	
0	Kaplamasız / Uncoated	A	Alüminyum / Aluminum
1	Fosfat / Phosphated / Fe/Znph	N	Polyamid / Polyamide
3	Galvaniz / Galvanized / Fe/Zn 8C Cr3-B	T	TPE
4	CrNi 304 AISI 304	P	Polipropilen / Polypropylene
6	CrNi 316 AISI 316		
9	Çinko Nikel / Zinc Nickel Fe/ZnNi		

Gövde + Cıvata + Üstlük
Clamp Body + Bolt + Cover Plate **46**

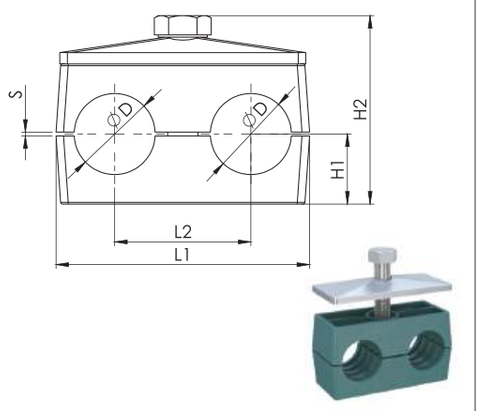

Genişlik / Width: 30 mm

Raya Uyumlu Kelepçe
Clamp with Rail Nut **47**

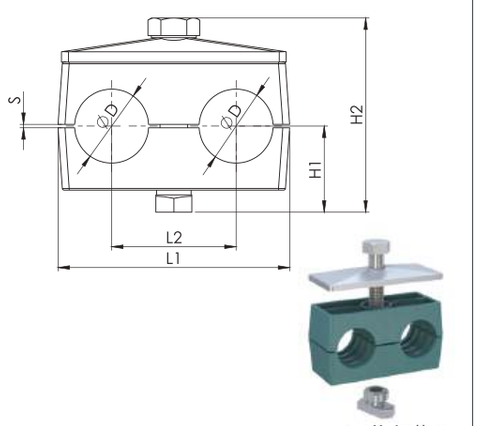

Genişlik / Width: 30 mm

Farklı malzeme talepleriniz için lütfen LMC Makina'ya danışınız.

For different material request please consult LMC Makina.

★ **Düz ve tırtırlı kilitlemeli kelepçe gövdesi için lütfen LMC Makina'ya danışınız.**

Please consult LMC Machinery for smooth and serrated anti-rotary clamp bodies.

C D 6 8 M 1 3 0 P 1 Y I 1 X X X . X

- **Üstlük** Cover Plate
- **Üstlük Kaplama Tipi** Cover Plate Finishing
- **Altlık Kaplama Tipi** Weld Plate Finishing
- **Gövde Malzemesi** Clamp Body Material
- **Gövde Renk** Clamp Body Colour
- **Grup** Group
- **Ölçü** Size

C D 7 0 M 1 3 3 P 1 Y I 1 X X X . X

- **Üstlük** Cover Plate
- **Üstlük Kaplama Tipi** Cover Plate Finishing
- **Altlık Kaplama Tipi** Weld Plate Finishing
- **Gövde Malzemesi** Clamp Body Material
- **Gövde Renk** Clamp Body Colour
- **Grup** Group
- **Ölçü** Size

Grup Group	Dış Çap (ØD) O.D. of Pipe / Tube/Hose mm	Anma Çapı (R) Boru Diş Nominal Bore Pipe inch	Dış Çap (ØD) O.D. of Pipe / Tube/Hose inch	Ölçü Tablosu Dimension Table L1	L2	H1	H2	S min.	Sipariş Kodu Order Code	Ölçü Tablosu Dimension Table L1	L2	H1	H2	S min.	Sipariş Kodu Order Code
I1	6			36	20	13.5	38	0.6	CD68M130P1YI1006.0	36	20	20.5	45	0.6	CD70M133P1YI1006.0
	6.4		1/4						CD68M130P1YI1006.4						CD70M133P1YI1006.4
	8		5/16						CD68M130P1YI1008.0						CD70M133P1YI1008.0
	9.5		3/8						CD68M130P1YI1009.5						CD70M133P1YI1009.5
	10	R 1/8							CD68M130P1YI1010.0						CD70M133P1YI1010.0
	12								CD68M130P1YI1012.0						CD70M133P1YI1012.0
I2	12.7		1/2	53	29	13.5	39.5	0.7	CD68M130P1YI2012.7	53	29	20.5	46.5	0.7	CD70M133P1YI2012.7
	13.5	R 1/4							CD68M130P1YI2013.5						CD70M133P1YI2013.5
	14								CD68M130P1YI2014.0						CD70M133P1YI2014.0
	15								CD68M130P1YI2015.0						CD70M133P1YI2015.0
	16		5/8						CD68M130P1YI2016.0						CD70M133P1YI2016.0
	17.2	R 3/8							CD68M130P1YI2017.2						CD70M133P1YI2017.2
	18								CD68M130P1YI2018.0						CD70M133P1YI2018.0
I3	19		3/4	67	36	18.5	49.5	0.7	CD68M130P1YI3019.0	67	36	25.5	56.5	0.7	CD70M133P1YI3019.0
	20								CD68M130P1YI3020.0						CD70M133P1YI3020.0
	21.3	R 1/2							CD68M130P1YI3021.3						CD70M133P1YI3021.3
	22		7/8						CD68M130P1YI3022.0						CD70M133P1YI3022.0
	23								CD68M130P1YI3023.0						CD70M133P1YI3023.0
	25								CD68M130P1YI3025.0						CD70M133P1YI3025.0
	25.4		1						CD68M130P1YI3025.4						CD70M133P1YI3025.4
I4	26.9	R 3/4		82	45	20.5	53.5	0.7	CD68M130P1YI4026.9	82	45	27.5	60.5	0.7	CD70M133P1YI4026.9
	28								CD68M130P1YI4028.0						CD70M133P1YI4028.0
	30								CD68M130P1YI4030.0						CD70M133P1YI4030.0
I5	32		1 1/4	106	56	27	66.5	0.7	CD68M130P1YI5032.0	106	56	34	73.5	0.7	CD70M133P1YI5032.0
	33.7	R 1							CD68M130P1YI5033.7						CD70M133P1YI5033.7
	35								CD68M130P1YI5035.0						CD70M133P1YI5035.0
	38		1 1/2						CD68M130P1YI5038.0						CD70M133P1YI5038.0
	40								CD68M130P1YI5040.0						CD70M133P1YI5040.0
	42	R 1 1/4							CD68M130P1YI5042.0						CD70M133P1YI5042.0

*** İstek üzerine, ikiz seri boru kelepçelerinin delikleri birbirinden farklı çaplarda da üretilebilmektedir.**

* In twin series pipe clamps, the diameter of each pipe hole can be produced with different sizes upon request.

Gövde Malzemesi Clamp Body Material		Metal + Kaplama Tipi Metal + Surface Finishing		Vida Tipi Thread Type	
A	Alüminyum / Aluminum	0	Kaplamasız / Uncoated	C	UNC
N	Polyamid / Polyamide	1	Fosfat / Phosphated / Fe/Znph	F	UNF
T	TPE	3	Galvaniz / Galvanized / Fe/Zn 8C Cr3-B	M	Metrik / Metric
P	Polipropilen / Polypropylene	4	CrNi 304 AISI 304	W	Whitworth
		6	CrNi 316 AISI 316		
		9	Çinko Nikel / Zinc Nickel Fe/ZnNi		

Farklı malzeme talepleriniz için lütfen LMC Makina'ya danışınız.

For different material request please consult LMC Makina.

★ **Düz ve tırtırlı kilitlemeli kelepçe gövdesi için lütfen LMC Makina'ya danışınız.**

Please consult LMC Machinery for smooth and serrated anti-rotary clamp bodies.

Kelepçe Üst Takım
Clamp Upper Set

48

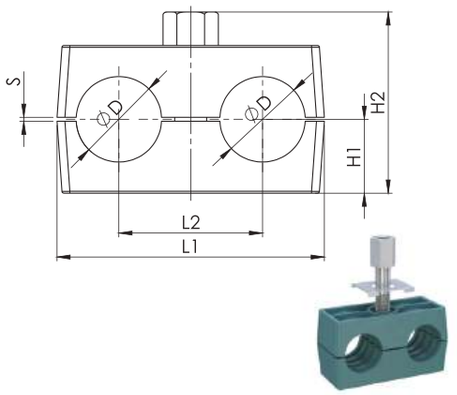

Genişlik / Width: 30 mm

Kelepçe Gövdesi
Clamp Body

49

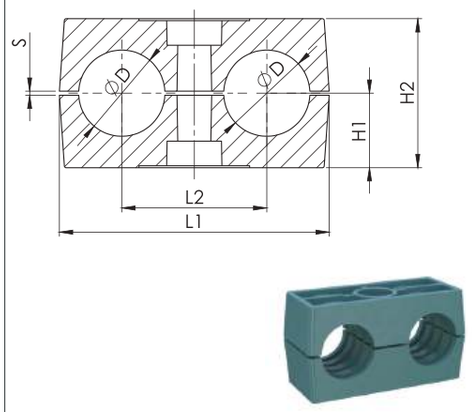

Genişlik / Width: 30 mm

C	D	a	a	M	6	3	0	P	1	Y	I	1	X	X	X	.	X

- **Üstlük** Cover Plate
- **Üstlük Kaplama Tipi** Cover Plate Finishing
- **Altlık Kaplama Tipi** Weld Plate Finishing
- **Gövde Malzemesi** Clamp Body Material
- **Gövde Renk** Clamp Body Colour
- **Grup** Group
- **Ölçü** Size

C	2	P	1	Y	I	1	X	X	X	.	X

- **Gövde Malzemesi** Clamp Body Material
- **Gövde Tipi** Clamp Body Design
- **Gövde Renk** Clamp Body Colour
- **Grup** Group
- **Ölçü** Size

Grup Group	Dış Çap (ØD) O.D. of Pipe / Tube/Hose mm	Anma Çapı (R) Boru Diş Nominal Bore Pipe inch	Dış Çap (ØD) O.D. of Pipe / Tube/Hose inch	Ölçü Tablosu Dimension Table L1	L2	H1	H2	S min.	Sipariş Kodu Order Code	Ölçü Tablosu Dimension Table L1	L2	H1	H2	S min.	Sipariş Kodu Order Code
I1	6			36	20	13.5	33	0.6	CDaaM630P1YI1006.0	36	20	13.5	27	0.6	C2P1YI1006.0
	6.4		1/4						CDaaM630P1YI1006.4						C2P1YI1006.4
	8		5/16						CDaaM630P1YI1008.0						C2P1YI1008.0
	9.5		3/8						CDaaM630P1YI1009.5						C2P1YI1009.5
	10	R 1/8							CDaaM630P1YI1010.0						C2P1YI1010.0
	12								CDaaM630P1YI1012.0						C2P1YI1012.0
I2	12.7		1/2	53	29	13.5	33	0.7	CDaaM630P1YI2012.7	53	29	13.5	27	0.7	C2P1YI2012.7
	13.5	R 1/4							CDaaM630P1YI2013.5						C2P1YI2013.5
	14								CDaaM630P1YI2014.0						C2P1YI2014.0
	15								CDaaM630P1YI2015.0						C2P1YI2015.0
	16		5/8						CDaaM630P1YI2016.0						C2P1YI2016.0
	17.2	R 3/8							CDaaM630P1YI2017.2						C2P1YI2017.2
	18								CDaaM630P1YI2018.0						C2P1YI2018.0
I3	19		3/4	67	36	18.5	43	0.7	CDaaM630P1YI3019.0	67	36	18.5	37	0.7	C2P1YI3019.0
	20								CDaaM630P1YI3020.0						C2P1YI3020.0
	21.3	R 1/2							CDaaM630P1YI3021.3						C2P1YI3021.3
	22		7/8						CDaaM630P1YI3022.0						C2P1YI3022.0
	23								CDaaM630P1YI3023.0						C2P1YI3023.0
	25								CDaaM630P1YI3025.0						C2P1YI3025.0
	25.4		1						CDaaM630P1YI3025.4						C2P1YI3025.4
I4	26.9	R 3/4		82	45	20.5	47	0.7	CDaaM630P1YI4026.9	82	45	20.5	41	0.7	C2P1YI4026.9
	28								CDaaM630P1YI4028.0						C2P1YI4028.0
	30								CDaaM630P1YI4030.0						C2P1YI4030.0
I5	32		1 1/4	106	56	27	60	0.7	CDaaM630P1YI5032.0	106	56	27	54	0.7	C2P1YI5032.0
	33.7	R 1							CDaaM630P1YI5033.7						C2P1YI5033.7
	35								CDaaM630P1YI5035.0						C2P1YI5035.0
	38		1 1/2						CDaaM630P1YI5038.0						C2P1YI5038.0
	40								CDaaM630P1YI5040.0						C2P1YI5040.0
	42	R 1 1/4							CDaaM630P1YI5042.0						C2P1YI5042.0

*** İstek üzerine, ikiz seri boru kelepçelerinin delikleri birbirinden farklı çaplarda da üretilebilmektedir.**

* In twin series pipe clamps, the diameter of each pipe hole can be produced with different sizes upon request.

Gövde Malzemesi Clamp Body Material		Metal + Kaplama Tipi Metal + Surface Finishing		Vida Tipi Thread Type	
A	Alüminyum / Aluminum	0	Kaplamasız / Uncoated	C	UNC
N	Polyamid / Polyamide	1	Fosfat / Phosphated / Fe/Znph	F	UNF
T	TPE	3	Galvaniz / Galvanized / Fe/Zn 8C Cr3-B	M	Metrik / Metric
P	Polipropilen / Polypropylene	4	CrNi 304 AISI 304	W	Whitworth
		6	CrNi 316 AISI 316		
		9	Çinko Nikel / Zinc Nickel Fe/ZnNi		

Farklı malzeme talepleriniz için lütfen LMC Makina'ya danışınız.

For different material request please consult LMC Makina.

★ **Düz ve tırtırlı kilitlemeli kelepçe gövdesi için lütfen LMC Makina'ya danışınız.**

Please consult LMC Machinery for smooth and serrated anti-rotary clamp bodies.

Kilitlemeli Kelepçe Gövdesi 50
Anti Rotary Clamp Body

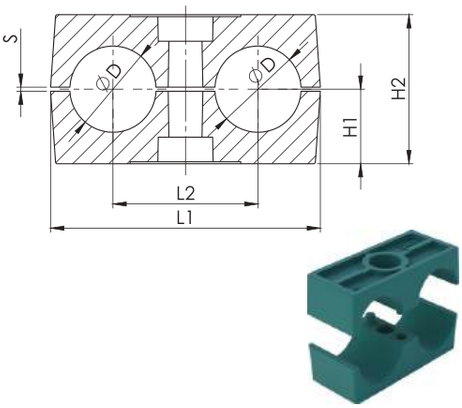

Genişlik / Width: 30 mm

C	2	P	2	R	Y	I	1	X	X	X	.	X

- P: **Gövde Malzemesi** Clamp Body Material
- 2: **Gövde Tipi** Clamp Body Design
- Y: **Gövde Renk** Clamp Body Colour
- I: **Grup** Group
- X X X: **Ölçü** Size

Grup Group	Dış Çap (ØD) O.D. of Pipe / Tube/Hose mm	Anma Çapı (R) Boru Diş Nominal Bore Pipe inch	Dış Çap (ØD) O.D. of Pipe / Tube/Hose inch	Ölçü Tablosu Dimension Table L1	L2	H1	H2	S min.	Sipariş Kodu Order Code
I1	6			36	20	13.5	27	0.6	C2P2YRI1006.0
	6.4		1/4						C2P2YRI1006.4
	8		5/16						C2P2YRI1008.0
	9.5		3/8						C2P2YRI1009.5
	10	R 1/8							C2P2YRI1010.0
	12								C2P2YRI1012.0
I2	12.7		1/2	53	29	13.5	27	0.7	C2P2YRI2012.7
	13.5	R 1/4							C2P2YRI2013.5
	14								C2P2YRI2014.0
	15								C2P2YRI2015.0
	16		5/8						C2P2YRI2016.0
	17.2	R 3/8							C2P2YRI2017.2
	18								C2P2YRI2018.0
I3	19		3/4	67	36	18.5	37	0.7	C2P2YRI3019.0
	20								C2P2YRI3020.0
	21.3	R 1/2							C2P2YRI3021.3
	22		7/8						C2P2YRI3022.0
	23								C2P2YRI3023.0
	25								C2P2YRI3025.0
	25.4		1						C2P2YRI3025.4
I4	26.9	R 3/4		82	45	20.5	41	0.7	C2P2YRI4026.9
	28								C2P2YRI4028.0
	30								C2P2YRI4030.0
I5	32		1 1/4	106	56	27	54	0.7	C2P2YRI5032.0
	33.7	R 1							C2P2YRI5033.7
	35								C2P2YRI5035.0
	38		1 1/2						C2P2YRI5038.0
	40								C2P2YRI5040.0
	42	R 1 1/4							C2P2YRI5042.0

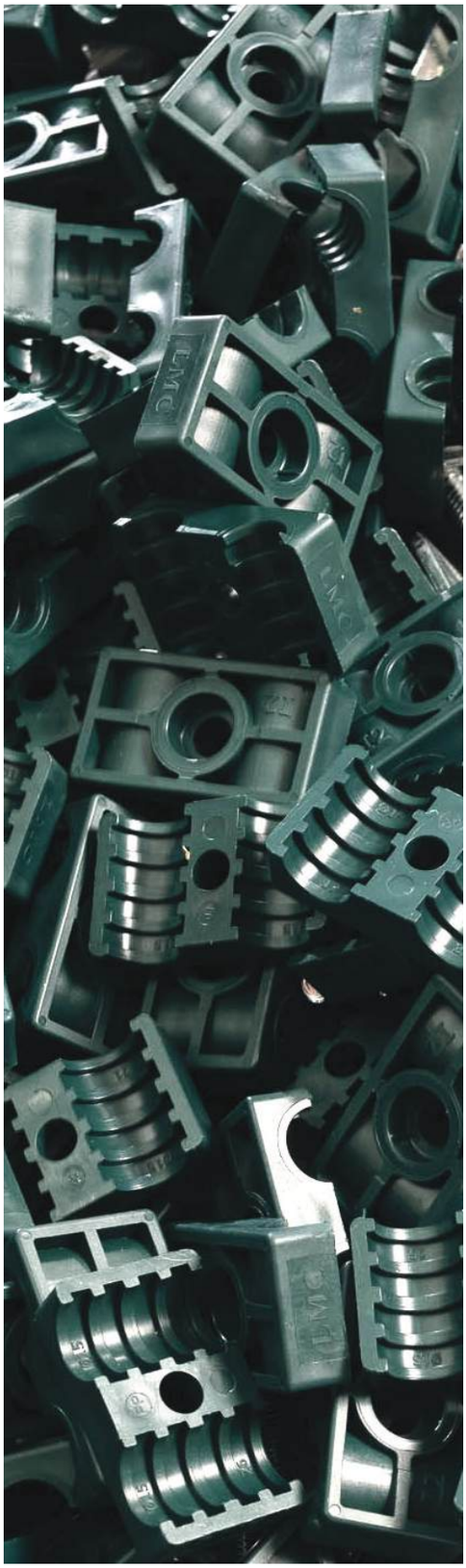

*** İstek üzerine, ikiz seri boru kelepçelerinin delikleri birbirinden farklı çaplarda da üretilebilmektedir.**

* In twin series pipe clamps, the diameter of each pipe hole can be produced with different sizes upon request.

Metal + Kaplama Tipi Metal + Surface Finishing		Vida Tipi Thread Type	
0	Kaplamasız / Uncoated	C	UNC
1	Fosfat / Phosphated / Fe/Znph	F	UNF
3	Galvaniz / Galvanized / Fe/Zn 8C Cr3-B	M	Metrik / Metric
4	CrNi 304 AISI 304	W	Whitworth
6	CrNi 316 AISI 316		
9	Çinko Nikel / Zinc Nickel Fe/ZnNi		

Farklı malzeme talepleriniz için lütfen LMC Makina'ya danışınız.

For different material request please consult LMC Makina.

Alt Plaka
Weld Plate
51

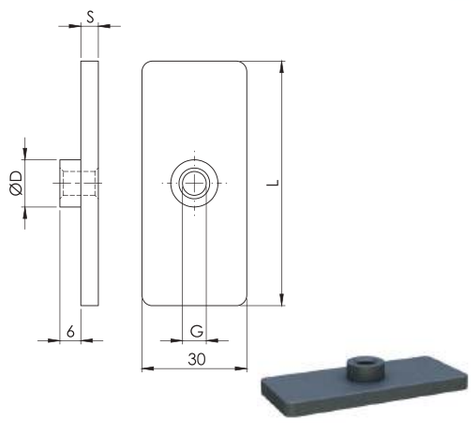

C	A	0	0	M	1	1	1
				Vida Tipi Thread Type	Metal + Kaplama Tipi Metal + Surface Finishing		Grup Group

Montaj Delikli Alt Plaka
Elongated Weld Plate
52

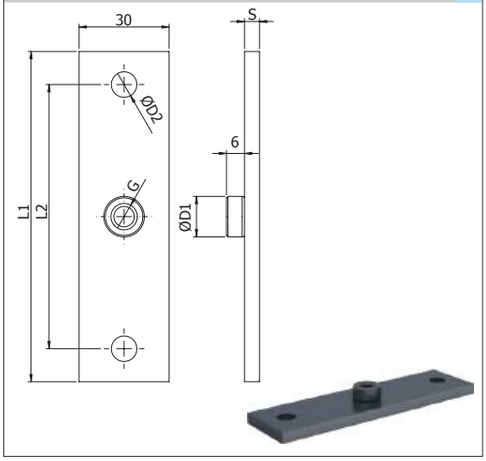

C	A	0	1	M	1	1	1
				Vida Tipi Thread Type	Metal + Kaplama Tipi Metal + Surface Finishing		Grup Group

Grup Group	Dış Çap (ØD) O.D. of Pipe / Tube/Hose mm	Anma Çapı (R) Boru Diş Nominal Bore Pipe inch	Dış Çap (ØD) O.D. of Pipe / Tube/Hose inch
I1	6		
	6.4		1/4
	8		5/16
	9.5		3/8
	10	R 1/8	
	12		
I2	12.7		1/2
	13.5	R 1/4	
	14		
	15		
	16		5/8
	17.2	R 3/8	
	18		
I3	19		3/4
	20		
	21.3	R 1/2	
	22		7/8
	23		
	25		
	25.4		1
I4	26.9	R 3/4	
	28		
	30		
I5	32		1 1/4
	33.7	R 1	
	35		
	38		1 1/2
	40		
	42	R 1 1/4	

Ölçü Tablosu Dimension Table L	S	ØD1	G	Sipariş Kodu Order Code
37	3	12	M6 1/4-20 UNC	CA00M1I1 CA00C1I1
55	5	14	M8 5/16-18 UNC	CA00M1I2 CA00C1I2
70	5	14	M8 5/16-18 UNC	CA00M1I3 CA00C1I3
85	5	14	M8 5/16-18 UNC	CA00M1I4 CA00C1I4
110	5	14	M8 5/16-18 UNC	CA00M1I5 CA00C1I5

Ölçü Tablosu Dimension Table L	S	ØD1	G	Sipariş Kodu Order Code
37	3	12	M6 1/4-20 UNC	CA01M1I1 CA01C1I1
55	5	14	M8 5/16-18 UNC	CA00M1I2 CA00C1I2
70	5	14	M8 5/16-18 UNC	CA00M1I3 CA00C1I3
85	5	14	M8 5/16-18 UNC	CA00M1I4 CA00C1I4
110	5	14	M8 5/16-18 UNC	CA00M1I5 CA00C1I5

Metal + Kaplama Tipi Metal + Surface Finishing		Gövde Malzemesi Clamp Body Material	
0	Kaplamasız / Uncoated	A	Alüminyum / Aluminum
1	Fosfat / Phosphated / Fe/Znph	N	Polyamid / Polyamide
3	Galvaniz / Galvanized / Fe/Zn 8C Cr3-B	T	TPE
4	CrNi 304 AISI 304	P	Polipropilen / Polypropylene
6	CrNi 316 AISI 316		
9	Çinko Nikel / Zinc Nickel Fe/ZnNi		

Farklı malzeme talepleriniz için lütfen LMC Makina'ya danışınız.

For different material request please consult LMC Makina.

Bombeli Altlık
Weld Plate with Lock Dut

53

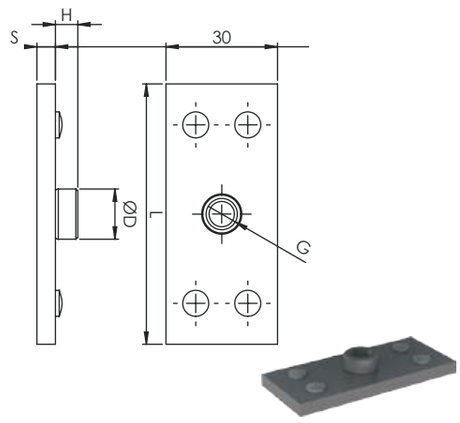

Üst Plaka
Cover Plate

54

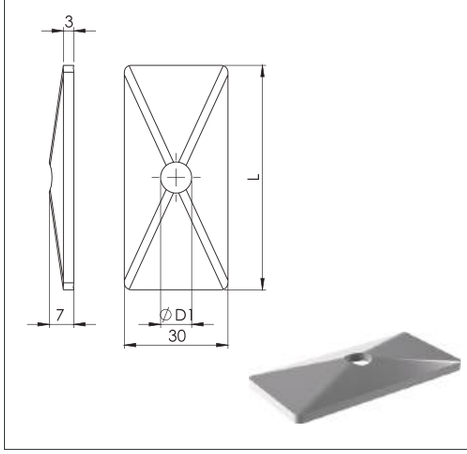

C	A	0	0	M	1	1	1	.B
				Vida Tipi Thread Type	Metal + Kaplama Tipi Metal + Surface Finishing		Grup Group	

C	U	0	0	T	3	1	1
					Metal + Kaplama Tipi Metal + Surface Finishing		Grup Group

Grup Group	Dış Çap (ØD) O.D. of Pipe / Tube/Hose mm	Anma Çapı (R) Boru Diş Nominal Bore Pipe inch	Dış Çap (ØD) O.D. of Pipe / Tube/Hose inch	Ölçü Tablosu Dimension Table L	S	ØD1	G	Sipariş Kodu Order Code	Ölçü Tablosu Dimension Table L	ØD1	Sipariş Kodu Order Code
I1	6			37	3	12	M6 1/4-20 UNC	CA00M1I1.B CA00C1I1.B	34	7	CU00T3I1
	6.4		1/4								
	8		5/16								
	9.5		3/8								
	10	R 1/8									
	12										
I2	12.7		1/2	55	5	14	M8 5/16-18 UNC	CA00M1I2.B CA00C1I2.B	52	9	CU00T3I2
	13.5	R 1/4									
	14										
	15										
	16		5/8								
	17.2	R 3/8									
	18										
I3	19		3/4	70	5	14	M8 5/16-18 UNC	CA00M1I3.B CA00C1I3.B	65	9	CU00T3I3
	20										
	21.3	R 1/2									
	22		7/8								
	23										
	25										
	25.4		1								
I4	26.9	R 3/4		85	5	14	M8 5/16-18 UNC	CA00M1I4.B CA00C1I4.B	79	9	CU00T3I4
	28										
	30										
I5	32		1 1/4	110	5	14	M8 5/16-18 UNC	CA00M1I5.B CA00C1I5.B	102	9	CU00T3I5
	33.7	R 1									
	35										
	38		1 1/2								
	40										
	42	R 1 1/4									

Metal + Kaplama Tipi Metal + Surface Finishing		Vida Tipi Thread Type	
0	Kaplamasız / Uncoated	C	UNC
3	Galvaniz / Galvanized / Fe/Zn 8C Cr3-B	F	UNF
4	CrNi 304 AISI 304	M	Metrik / Metric
6	CrNi 316 AISI 316	W	Whitworth
9	Çinko Nikel / Zinc Nickel Fe/ZnNi		

Farklı malzeme talepleriniz için lütfen LMC Makina'ya danışınız.

For different material request please consult LMC Makina.

Çoklu Alt Plaka
Group Weld Plate

55

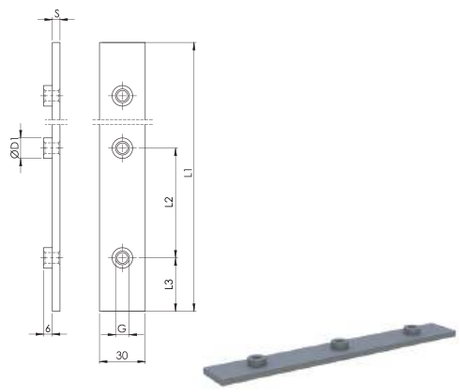

n: Kelepçe Adedi / n: Nr. of Clamps

Montaj Rayı
Mounting Rail

56

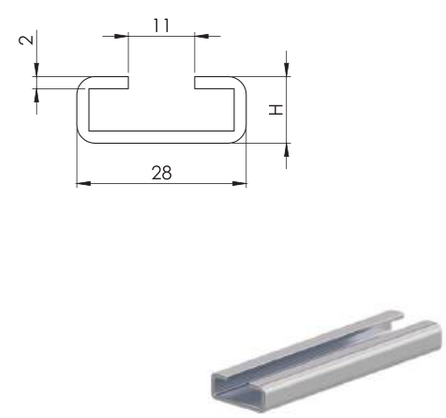

C	A	0	5	M	1	1	1
				Vida Tipi Thread Type	Metal + Kaplama Tipi Metal + Surface Finishing	Grup Group	

C	R	Y	0	1	1	2	8	1
			Metal + Kaplama Tipi Metal + Surface Finishing	Ölçü Size				Boy Length

Grup Group	Dış Çap (ØD) O.D. of Pipe / Tube/Hose mm	Anma Çapı (R) Boru Diş Nominal Bore Pipe inch	Dış Çap (ØD) O.D. of Pipe / Tube/Hose inch
I1	6		
	6.4		1/4
	8		5/16
	9.5		3/8
	10	R 1/8	
	12		
I2	12.7		1/2
	13.5	R 1/4	
	14		
	15		
	16		5/8
	17.2	R 3/8	
	18		
I3	19		3/4
	20		
	21.3	R 1/2	
	22		7/8
	23		
	25		
	25.4		1
I4	26.9	R 3/4	
	28		
	30		
I5	32		1 1/4
	33.7	R 1	
	35		
	38		1 1/2
	40		
	42	R 1 1/4	

Ölçü Tablosu Dimension Table L1	L2	L3	S	ØD1	G	n	Sipariş Kodu Order Code
196	40	18	3	12	M6 1/4-20 UNC	5	CA05M1I1 CA05C1I1
288	58	28	5	14	M8 5/16-18 UNC	5	CA05M1I2 CA05C1I2
358	72	35	5	14	M8 5/16-18 UNC	5	CA05M1I3 CA05C1I3
445	90	42	5	14	M8 5/16-18 UNC	5	CA05M1I4 CA05C1I4
558	112	55	5	14	M8 5/16-18 UNC	5	CA05M1I5 CA05C1I5

Ölçü Tablosu Dimension Table H	Boy / Length	Sipariş Kodu Order Code
11	1m	CRY011281
11	2m	CRY011282
14	1m	CRY014281
14	2m	CRY014282
30	1m	CRY030281
30	2m	CRY030282

Metal + Kaplama Tipi Metal + Surface Finishing		Vida Tipi Thread Type	
0	Kaplamasız / Uncoated	C	UNC
3	Galvaniz / Galvanized / Fe/Zn 8C Cr3-B	F	UNF
4	CrNi 304 AISI 304	M	Metrik / Metric
6	CrNi 316 AISI 316	W	Whitworth
9	Çinko Nikel / Zinc Nickel Fe/ZnNi		

Farklı malzeme talepleriniz için lütfen LMC Makina'ya danışınız.

For different material request please consult LMC Makina.

Ray Somunu
Rail Nut

57

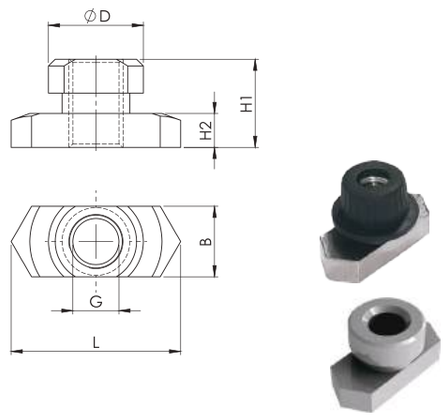

Altıköşe Başlı Cıvata
Hexagon Head Bolt

58

DIN 931 / 933 - ISO 4014

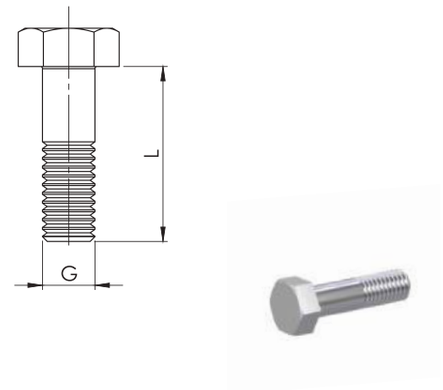

C	R	S	1	M	3	0	0	8
			Tip Type	Vida Tipi Thread Type	Metal + Kaplama Tipi Metal + Surface Finishing	Vida Ölçüsü Screw - Bolt Size		

C	C	A	M	3	0	0	6	0	3	5
			Vida Tipi Thread Type	Metal + Kaplama Tipi Metal + Surface Finishing	Vida Ölçüsü Screw - Bolt Size				Cıvata Boyu Screw - Bolt Length	

Grup Group	Dış Çap (ØD) O.D. of Pipe / Tube/Hose mm	Anma Çapı (R) Boru Diş Nominal Bore Pipe inch	Dış Çap (ØD) O.D. of Pipe / Tube/Hose inch
I1	6		
	6.4		1/4
	8		5/16
	9.5		3/8
	10	R 1/8	
	12		
I2	12.7		1/2
	13.5	R 1/4	
	14		
	15		
	16		5/8
	17.2	R 3/8	
	18		
I3	19		3/4
	20		
	21.3	R 1/2	
	22		7/8
	23		
	25		
	25.4		1
I4	26.9	R 3/4	
	28		
	30		
I5	32		1 1/4
	33.7	R 1	
	35		
	38		1 1/2
	40		
	42	R 1 1/4	

Ölçü Tablosu Dimension Table L	B	H1	H2	ØD1	G	Sipariş Kodu Order Code
25.4	10.4	13	5	12	M6 1/4-20 UNC	CRS5M3006 CRS5C3008
25.4	10.4	13	5	14	M8 5/16-18 UNC	CRS1M3008 CRS1C3010

Ölçü Tablosu Dimension Table GxL	Sipariş Kodu Order Code
M6x35 1/4-20 UNC x 1-3/8	CCAM3006035 CCAC3008035
M8x35 5/16-18 UNC x 1-3/8	CCAM3008035 CCAC3010035
M8x45 5/16-18 UNC x 1-3/4	CCAM3008045 CCAC3010045
M8x50 5/16-18 UNC x 2	CCAM3008050 CCAC3010050
M8x60 5/16-18 UNC x 2-1/2	CCAM3008060 CCAC3010060

Metal + Kaplama Tipi Metal + Surface Finishing	
0	Kaplamasız / Uncoated
1	Fosfat / Phosphated / Fe/Znph
3	Galvaniz / Galvanized / Fe/Zn 8C Cr3-B
4	CrNi 304 / AISI 304
6	CrNi 316 / AISI 316
9	Çinko Nikel / Zinc Nickel - Fe/ZnNi

Farklı malzeme talepleriniz için lütfen LMC Makina'ya danışınız.

For different material request please consult LMC Makina.

Ara Bağlantı Cıvatası
Stacking Bolt

59

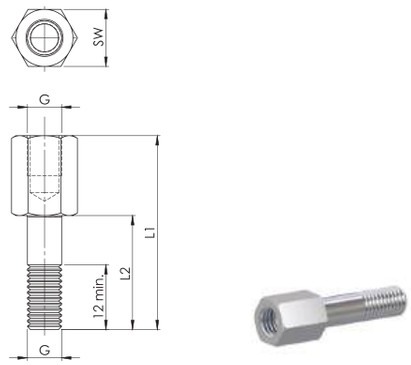

C	C	B	M	3	0	0	6	0	2	0
			Vida Tipi Thread Type	**Metal + Kaplama Tipi** Metal + Surface Finishing	**Vida Ölçüsü** Screw - Bolt Size			**Cıvata Boyu** Screw - Bolt Length		

Ara Bağlantı Plakası
Safety Locking Plate

60

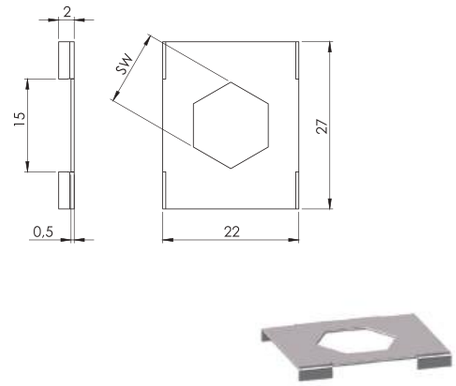

C	H	0	0	T	3	I	1
					Metal + Kaplama Tipi Metal + Surface Finishing	**Grup** Group	

Grup Group	Dış Çap (ØD) O.D. of Pipe / Tube/Hose mm	Anma Çapı (R) Boru Diş Nominal Bore Pipe inch	Dış Çap (ØD) O.D. of Pipe / Tube/Hose inch	Ölçü Tablosu Dimension Table L1	L2	SW	G	Sipariş Kodu Order Code	Ölçü Tablosu Dimension Table SW	Sipariş Kodu Order Code
I1	6			34	20	11	M6 1/4-20 UNC	CCBM3006020 CCBC3008020	11.1	CH00T3I1
	6.4		1/4							
	8		5/16							
	9.5		3/8							
	10	R 1/8								
	12									
I2	12.7		1/2	34	20	12	M8 5/16-18 UNC	CCBM3008020 CCBC3010020	12.1	CH00T3I2
	13.5	R 1/4								
	14									
	15									
	16		5/8							
	17.2	R 3/8								
	18									
I3	19		3/4	44	29	12	M8 5/16-18 UNC	CCBM3008029 CCBC3010029	12.1	
	20									
	21.3	R 1/2								
	22		7/8							
	23									
	25									
	25.4		1							
I4	26.9	R 3/4		49	34	12	M8 5/16-18 UNC	CCBM3008034 CCBC3010034	12.1	
	28									
	30									
I5	32		1 1/4	61	46	12	M8 5/16-18 UNC	CCBM3008046 CCBC3010046	12.1	
	33.7	R 1								
	35									
	38		1 1/2							
	40									
	42	R 1 1/4								

LMC®

L, K, V SERİSİ KELEPÇELER

L-K-V-SERIES CLAMPS

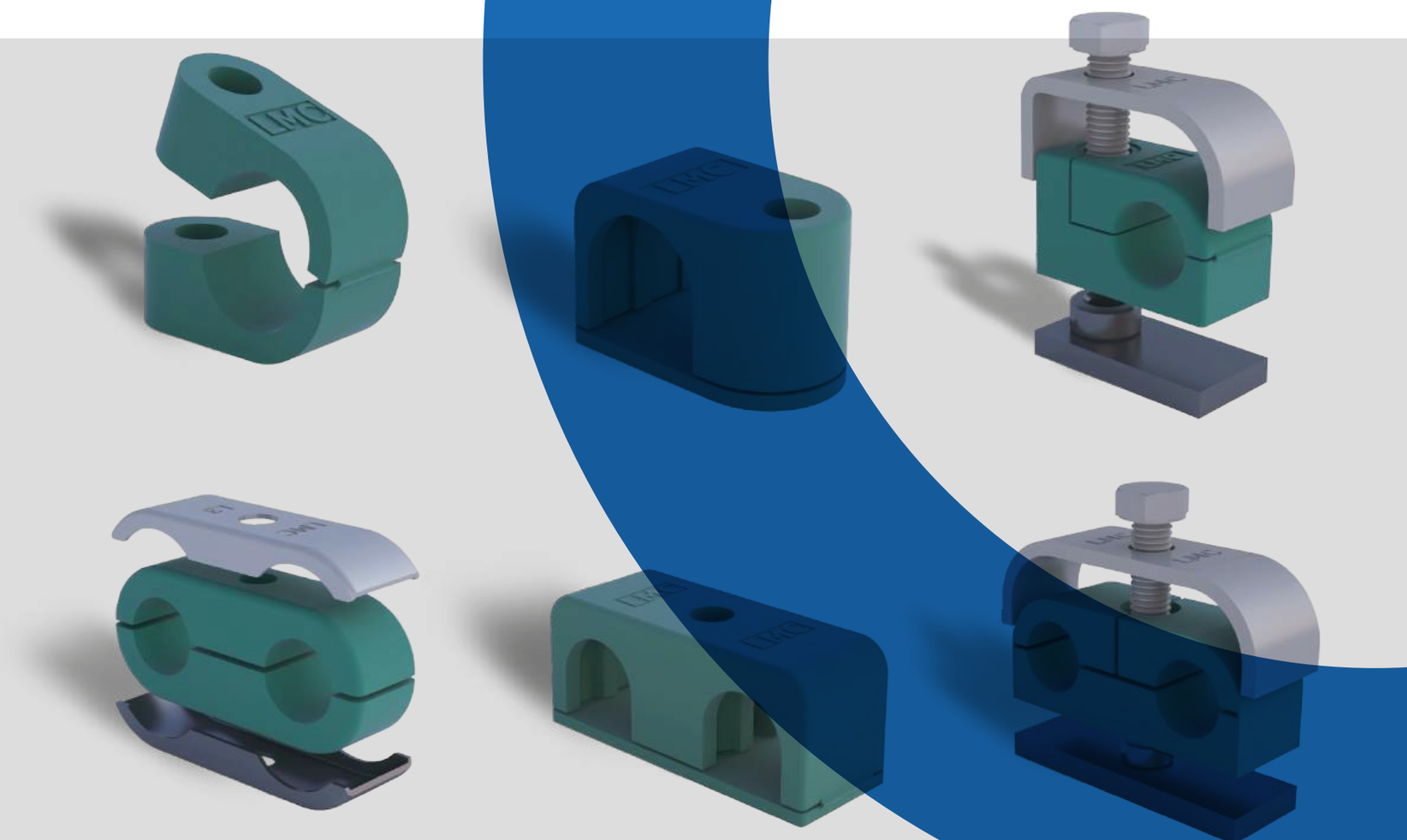

lmcmakina.com.tr

Metal + Kaplama Tipi Metal + Surface Finishing		Gövde Malzemesi Clamp Body Material	
0	Kaplamasız / Uncoated	A	Alüminyum / Aluminum
1	Fosfat / Phosphated / Fe/Znph	N	Polyamid / Polyamide
3	Galvaniz / Galvanized / Fe/Zn 8C Cr3-B	T	TPE
4	CrNi 304 AISI 304	P	Polipropilen / Polypropylene
6	CrNi 316 AISI 316		
9	Çinko Nikel / Zinc Nickel Fe/ZnNi		

Farklı malzeme talepleriniz için lütfen LMC Makina'ya danışınız.

For different material request please consult LMC Makina.

Kelepçe Gövdesi / Clamp Body — 61

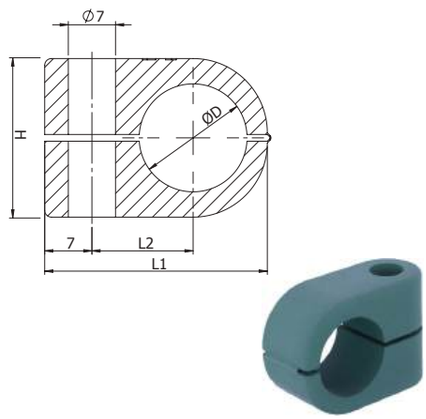

Komple Kelepçe / Complete Clamp — 62

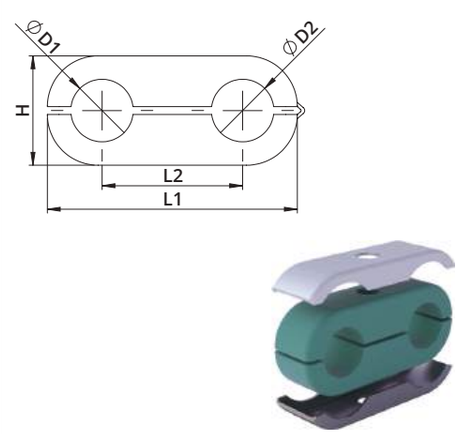

C	2	P	1	Y	L	1	X	X	X	.	X
		Gövde Malzemesi / Clamp Body Material	Gövde Tipi / Clamp Body Design	Gövde Renk / Clamp Body Colour	Grup / Group		Ölçü / Size				

C	D	a	a	T	1	3	3	P	1	Y	L	1	1	X	X	X	.	X
					Üstlük Kaplama Tipi / Cover Plate Finishing	Üstlük Kaplama Tipi / Cover Plate Finishing	Ana Kaplama Tipi / Wield Plate Finishing	Gövde Malzemesi / Clamp Body Material		Gövde Renk / Clamp Body Colour	Grup / Group			Ölçü / Size				

Grup Group	Dış Çap (ØD) O.D. of Pipe / Tube/Hose mm	Anma Çapı (R) Boru Diş Nominal Bore Pipe inch	Dış Çap (ØD) O.D. of Pipe / Tube/Hose inch	Ölçü Tablosu Dimension Table L1	L2	H	Sipariş Kodu Order Code	Ölçü Tablosu Dimension Table L1	L2	H	Sipariş Kodu Order Code
L1	6			31	18	13,5	C2P1YLI1006.0	31	18	13,5	CDaaT133P1YLI1006.0
	6,4		1/4"				C2P1YLI1006.4				CDaaT133P1YLI1006.4
	8		5/16"				C2P1YLI1008.0				CDaaT133P1YLI1008.0
L2	8			41	22	18,5	C2P1YLI2008.0	41	22	18,5	CDaaT133P1YLI2008.0
	9,5		3/8"				C2P1YLI2009.5				CDaaT133P1YLI2009.5
	10	R1/8"					C2P1YLI2010.0				CDaaT133P1YLI2010.0
	12						C2P1YLI2012.0				CDaaT133P1YLI2012.0
	12,7		1/2"				C2P1YLI2012.7				CDaaT133P1YLI2012.7
L3	10	R1/8"		54	30	23,5	C2P1YLI3010.0	54	30	23,5	CDaaT133P1YLI3010.0
	12						C2P1YLI3012.0				CDaaT133P1YLI3012.0
	12,7		1/2"				C2P1YLI3012.7				CDaaT133P1YLI3012.7
	13,5	R1/4"					C2P1YLI3013.5				CDaaT133P1YLI3013.5
	14						C2P1YLI3014.0				CDaaT133P1YLI3014.0
	15						C2P1YLI3015.0				CDaaT133P1YLI3015.0
	16		5/8"				C2P1YLI3016.0				CDaaT133P1YLI3016.0
L4	14			70	38	30,5	C2P1YLI4014.0	40	38	30,5	CDaaT133P1YLI4014.0
	15						C2P1YLI4015.0				CDaaT133P1YLI4015.0
	16		5/8"				C2P1YLI4016.0				CDaaT133P1YLI4016.0
	17,2	R3/8"					C2P1YLI4017.2				CDaaT133P1YLI4017.2
	18						C2P1YLI4018.0				CDaaT133P1YLI4018.0
	19		3/4"				C2P1YLI4019.0				CDaaT133P1YLI4019.0
	20						C2P1YLI4020.0				CDaaT133P1YLI4020.0
	21,3	R1/2"					C2P1YLI4021.3				CDaaT133P1YLI4021.3
	22						C2P1YLI4022.0				CDaaT133P1YLI4022.0

*** İstek üzerine, L serisi boru kelepçelerinin delikleri birbirinden farklı çaplarda da üretilebilmektedir.**

* In L series pipe clamps, the diameter of each pipe hole can be produced with different sizes upon request.

Metal + Kaplama Tipi Metal + Surface Finishing		Gövde Malzemesi Clamp Body Material	
0	Kaplamasız / Uncoated	A	Alüminyum / Aluminum
1	Fosfat / Phosphated / Fe/Znph	N	Polyamid / Polyamide
3	Galvaniz / Galvanized / Fe/Zn 8C Cr3-B	T	TPE
4	CrNi 304 AISI 304	P	Polipropilen / Polypropylene
6	CrNi 316 AISI 316		
9	Çinko Nikel / Zinc Nickel Fe/ZnNi		

Kelepçe Gövdesi
Clamp Body **63**

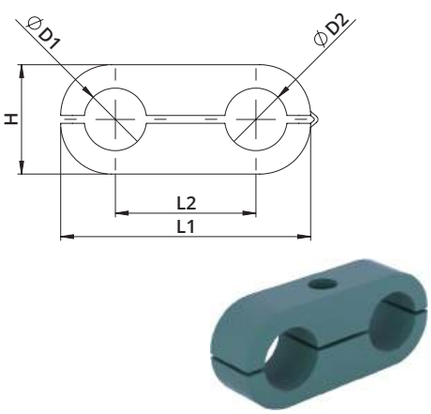

Üst & Alt Plaka
Cover & Weld Plate **64**

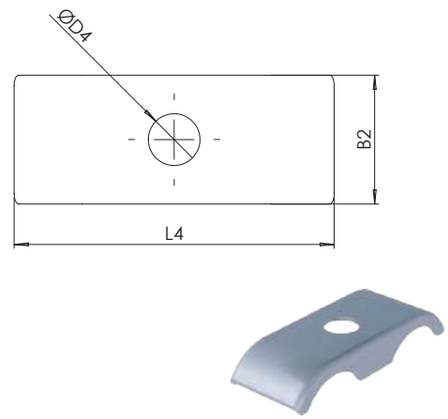

Farklı malzeme talepleriniz için lütfen LMC Makina'ya danışınız.

For different material request please consult LMC Makina.

C	2	P	1	Y	L	I	1	X	X	X	.	X
		Gövde Malzemesi Clamp Body Material	Gövde Tipi Clamp Body Design	Gövde Renk Clamp Body Colour		Grup Group				Ölçü Size		

C	U	0	0	T	3	L	I	X
				Vida Tipi Thread Type	Metal + Kaplama Tipi Metal + Surface Finishing	Grup Group		

Grup Group	Dış Çap (ØD) O.D. of Pipe / Tube/Hose mm	Anma Çapı (R) Boru Dış Nominal Bore Pipe inch	Dış Çap (ØD) O.D. of Pipe / Tube/Hose inch	Ölçü Tablosu Dimension Table L1	L2	H	Sipariş Kodu Order Code
LI1	6			31	18	13,5	C2P1YLI1006.0
	6,4		1/4"				C2P1YLI1006.4
	8		5/16"				C2P1YLI1008.0
LI2	8		5/16"	41	22	18,5	C2P1YLI2008.0
	9,5		3/8"				C2P1YLI2009.5
	10	R1/8"					C2P1YLI2010.0
	12						C2P1YLI2012.0
	12,7		1/2"				C2P1YLI2012.7
LI3	10			54	30	23,5	C2P1YLI3010.0
	12						C2P1YLI3012.0
	12,7		1/2"				C2P1YLI3012.7
	13,5	R1/4"					C2P1YLI3013.5
	14						C2P1YLI3014.0
	15						C2P1YLI3015.0
	16		5/8"				C2P1YLI3016.0
LI4	14			70	38	30,5	C2P1YLI4014.0
	15						C2P1YLI4015.0
	16		5/8"				C2P1YLI4016.0
	17,2	R3/8"					C2P1YLI4017.2
	18						C2P1YLI4018.0
	19		3/4"				C2P1YLI4019.0
	20						C2P1YLI4020.0
	21,3	R1/2"					C2P1YLI4021.3
	22		7/8"				C2P1YLI4022.0

Ölçü Tablosu Dimension Table L	H	Sipariş Kodu Order Code
31	5	CU00T3LI1
41	7	CU00T3LI2
52	7	CU00T3LI3
65	8	CU00T3LI4

*** İstek üzerine, L serisi boru kelepçelerinin delikleri birbirinden farklı çaplarda da üretilebilmektedir.**
* In L series pipe clamps, the diameter of each pipe hole can be produced with different sizes upon request.

Metal + Kaplama Tipi Metal + Surface Finishing		Gövde Malzemesi Clamp Body Material	
0	Kaplamasız / Uncoated	A	Alüminyum / Aluminum
1	Fosfat / Phosphated / Fe/Znph	N	Polyamid / Polyamide
3	Galvaniz / Galvanized / Fe/Zn 8C Cr3-B	T	TPE
4	CrNi 304 AISI 304	P	Polipropilen / Polypropylene
6	CrNi 316 AISI 316		
9	Çinko Nikel / Zinc Nickel Fe/ZnNi		

Farklı malzeme talepleriniz için lütfen LMC Makina'ya danışınız.

For different material request please consult LMC Makina.

Kelepçe Gövdesi
Clamp Body

65

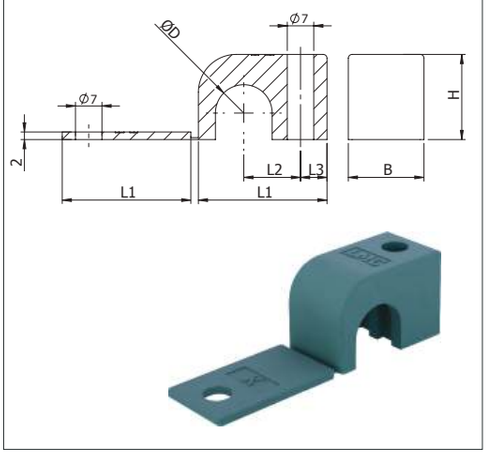

C	2	P	1	Y	K	1	X	X	X	.	X

- **Gövde Malzemesi** Clamp Body Material
- **Gövde Tipi** Clamp Body Design
- **Gövde Renk** Clamp Body Colour
- **Grup** Group
- **Ölçü** Size

Grup Group	Dış Çap (ØD) O.D. of Pipe / Tube/Hose mm	Anma Çapı (R) Boru Diş Nominal Bore Pipe inch	Dış Çap (ØD) O.D. of Pipe / Tube/Hose inch	Ölçü Tablosu Dimension Table L1	L2	L3	B	H	Sipariş Kodu Order Code
K1	6			22	9	6,5	12	10,5	C2P1YK1006.0
	6,4	R1/4"							C2P1YK1006.4
	8								C2P1YK1008.0
K2	9,5	R3/8"		27	11	7	16	15	C2P1YK2009.5
	10		1/8"						C2P1YK2010.0
	12								C2P1YK2012.0
K3	12,7	R1/2"		34	15	7	20	22,5	C2P1YK3012.7
	13,5		1/4"						C2P1YK3013.5
	14								C2P1YK3014.0
	15								C2P1YK3015.0
	16	R5/8"							C2P1YK3016.0
	17,2		3/8"						C2P1YK3017.2
	18								C2P1YK3018.0
K4	19	R3/4"		42	19	7	20	30	C2P1YK4019.0
	20								C2P1YK4020.0
	21,3		1/2"						C2P1YK4021.3
	22								C2P1YK4022.0
	25								C2P1YK4025.0
	25,4	R1"							C2P1YK4025.4

*** İstek üzerine, K serisi boru kelepçelerinin delikleri birbirinden farklı çaplarda da üretilebilmektedir.**

* In K series pipe clamps, the diameter of each pipe hole can be produced with different sizes upon request.

Metal + Kaplama Tipi Metal + Surface Finishing		Gövde Malzemesi Clamp Body Material	
0	Kaplamasız / Uncoated	A	Alüminyum / Aluminum
1	Fosfat / Phosphated / Fe/Znph	N	Polyamid / Polyamide
3	Galvaniz / Galvanized / Fe/Zn 8C Cr3-B	T	TPE
4	CrNi 304 AISI 304	P	Polipropilen / Polypropylene
6	CrNi 316 AISI 316		
9	Çinko Nikel / Zinc Nickel Fe/ZnNi		

Farklı malzeme talepleriniz için lütfen LMC Makina'ya danışınız.

For different material request please consult LMC Makina.

Kelepçe Gövdesi
Clamp Body
66

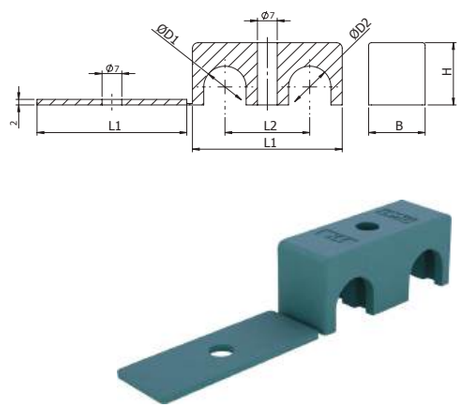

C	2	P	1	Y	K	I	1	X	X	X	.	X

- P: Gövde Malzemesi / Clamp Body Material
- 1: Gövde Tipi / Clamp Body Design
- Y: Gövde Renk / Clamp Body Colour
- I: Grup / Group
- X X X: Ölçü / Size

Grup Group	Dış Çap (ØD) O.D. of Pipe / Tube/Hose mm	Anma Çapı (R) Boru Diş Nominal Bore Pipe inch	Dış Çap (ØD) O.D. of Pipe / Tube/Hose inch	Ölçü Tablosu Dimension Table L1	L2	B	H	Sipariş Kodu Order Code
KI1	6			31	18	12	10,5	C2P1YKI1006.0
	6,4	R1/4"						C2P1YKI1006.4
	8							C2P1YKI1008.0
KI2	9,5	R3/8"		39	22	16	15	C2P1YKI2009.5
	10		1/8"					C2P1YKI2010.0
	12							C2P1YKI2012.0
KI3	12,7	R1/2"		53	30	20	22,5	C2P1YKI3012.7
	13,5		1/4"					C2P1YKI3013.5
	14							C2P1YKI3014.0
	15							C2P1YKI3015.0
	16	R5/8"						C2P1YKI3016.0
	17,2		3/8"					C2P1YKI3017.2
	18							C2P1YKI3018.0
KI4	19	R3/4"		70	38	20	30	C2P1YKI4019.0
	20							C2P1YKI4020.0
	21,3		1/2"					C2P1YKI4021.3
	22							C2P1YKI4022.0
	25							C2P1YKI4025.0
	25,4	R1"						C2P1YKI4025.4

*** İstek üzerine, K serisi boru kelepçelerinin delikleri birbirinden farklı çaplarda da üretilebilmektedir.**
* In K series pipe clamps, the diameter of each pipe hole can be produced with different sizes upon request.

Metal + Kaplama Tipi Metal + Surface Finishing		Gövde Malzemesi Clamp Body Material	
0	Kaplamasız / Uncoated	A	Alüminyum / Aluminum
1	Fosfat / Phosphated / Fe/Znph	N	Polyamid / Polyamide
3	Galvaniz / Galvanized / Fe/Zn 8C Cr3-B	T	TPE
4	CrNi 304 AISI 304	P	Polipropilen / Polypropylene
6	CrNi 316 AISI 316		
9	Çinko Nikel / Zinc Nickel Fe/ZnNi		

Farklı malzeme talepleriniz için lütfen LMC Makina'ya danışınız.

For different material request please consult LMC Makina.

Komple Kelepçe
Complete Clamp **67**

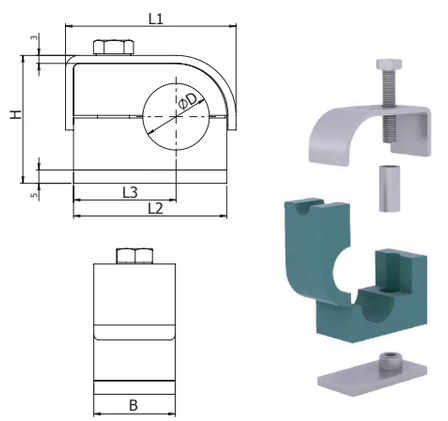

C M 4 0 M 1 3 1 T 2 H V 1 X X X . X

- **Üstlük** Cover Plate
- **Üstlük Kaplama Tipi** Cover Plate Finishing
- **Altlık Kaplama Tipi** Weld Plate Finishing
- **Gövde Malzemesi** Clamp Body Material
- **Gövde Renk** Clamp Body Colour
- **Grup** Group
- **Ölçü** Size

Raya Uyumlu Üstüklü Kelepçe
Clamp with Cover Plate + Rail Nut **68**

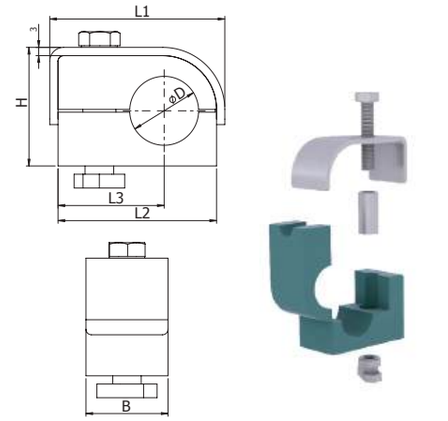

C D 7 0 M 1 3 3 T 2 H V 1 X X X . X

- **Üstlük** Cover Plate
- **Üstlük Kaplama Tipi** Cover Plate Finishing
- **Altlık Kaplama Tipi** Weld Plate Finishing
- **Gövde Malzemesi** Clamp Body Material
- **Gövde Renk** Clamp Body Colour
- **Grup** Group
- **Ölçü** Size

Grup Group	Dış Çap (ØD) O.D. of Pipe / Tube/Hose mm	Anma Çapı (R) Boru Diş Nominal Bore Pipe inch	Dış Çap (ØD) O.D. of Pipe / Tube/Hose inch	Ölçü Tablosu Dimension Table L1	L2	L3	B	H	Sipariş Kodu Order Code
V1	6			40	34	21	20	28	CM40M131T2HV1006.0
	6,4	1/4"							CM40M131T2HV1006.4
	8	5/16"							CM40M131T2HV1008.0
	9,5	3/8"							CM40M131T2HV1009.5
	10		1/8"						CM40M131T2HV1010.0
	11								CM40M131T2HV1011.0
	12								CM40M131T2HV1012.0
	12,7	1/2"							CM40M131T2HV1012.7
V2	4			40	39	27	20	32	CM40M131T2HV2004.0
	6								CM40M131T2HV2006.0
	6,4	1/4"							CM40M131T2HV2006.4
	8	5/16"							CM40M131T2HV2008.0
	9,5	3/8"							CM40M131T2HV2009.5
	10		1/8"						CM40M131T2HV2010.0
	11								CM40M131T2HV2011.0
	12								CM40M131T2HV2012.0
	12,7	1/2"							CM40M131T2HV2012.7
	13,5		1/4"						CM40M131T2HV2013.5
	14								CM40M131T2HV2014.0
	15								CM40M131T2HV2015.0
	16	5/8"							CM40M131T2HV2016.0
	17,2		3/8"						CM40M131T2HV2017.2
	18								CM40M131T2HV2018.0
	19	3/4"							CM40M131T2HV2019.0
	20								CM40M131T2HV2020.0
V3	21,3		1/2"	63,5	57,5	38,5	30	48	CM40M131T2HV3021.3
	22	7/8"							CM40M131T2HV3022.0
	23								CM40M131T2HV3023.0
	25								CM40M131T2HV3025.0
	25,4	1"							CM40M131T2HV3025.4
	28								CM40M131T2HV3028.0
	30								CM40M131T2HV3030.0
	32	1-1/4"							CM40M131T2HV3032.0

Ölçü Tablosu Dimension Table L1	L2	L3	B	H	Sipariş Kodu Order Code
40	34	21	20	23	CD70M133T2HV1006.0
					CD70M133T2HV1006.4
					CD70M133T2HV1008.0
					CD70M133T2HV1009.5
					CD70M133T2HV1010.0
					CD70M133T2HV1011.0
					CD70M133T2HV1012.0
					CD70M133T2HV1012.7
40	39	27	20	27	CD70M133T2HV2004.0
					CD70M133T2HV2006.0
					CD70M133T2HV2006.4
					CD70M133T2HV2008.0
					CD70M133T2HV2009.5
					CD70M133T2HV2010.0
					CD70M133T2HV2011.0
					CD70M133T2HV2012.0
					CD70M133T2HV2012.7
					CD70M133T2HV2013.5
					CD70M133T2HV2014.0
					CD70M133T2HV2015.0
					CD70M133T2HV2016.0
					CD70M133T2HV2017.2
					CD70M133T2HV2018.0
					CD70M133T2HV2019.0
					CD70M133T2HV2020.0
63,5	57,5	38,5	30	43	CD70M133T2HV3021.3
					CD70M133T2HV3022.0
					CD70M133T2HV3023.0
					CD70M133T2HV3025.0
					CD70M133T2HV3025.4
					CD70M133T2HV3028.0
					CD70M133T2HV3030.0
					CD70M133T2HV3032.0

*** İstek üzerine, V serisi boru kelepçelerinin delikleri birbirinden farklı çaplarda da üretilebilmektedir.**

* In V series pipe clamps, the diameter of each pipe hole can be produced with different sizes upon request.

Metal + Kaplama Tipi Metal + Surface Finishing		Gövde Malzemesi Clamp Body Material	
0	Kaplamasız / Uncoated	A	Alüminyum / Aluminum
1	Fosfat / Phosphated / Fe/Znph	N	Polyamid / Polyamide
3	Galvaniz / Galvanized / Fe/Zn 8C Cr3-B	T	TPE
4	CrNi 304 AISI 304	P	Polipropilen / Polypropylene
6	CrNi 316 AISI 316		
9	Çinko Nikel / Zinc Nickel Fe/ZnNi		

Farklı malzeme talepleriniz için lütfen LMC Makina'ya danışınız.

For different material request please consult LMC Makina.

Göve + Civata + Üstlük
Clamp Body + Bolt + Cover Plate **69**

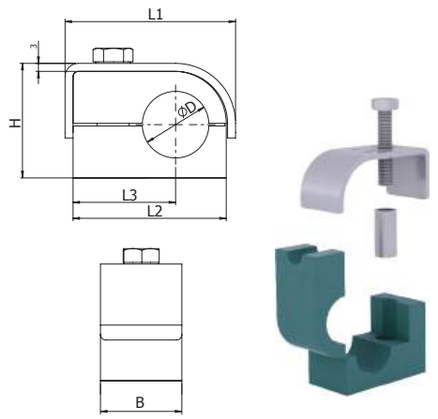

Kelepçe Gövdesi
Clamp Body **70**

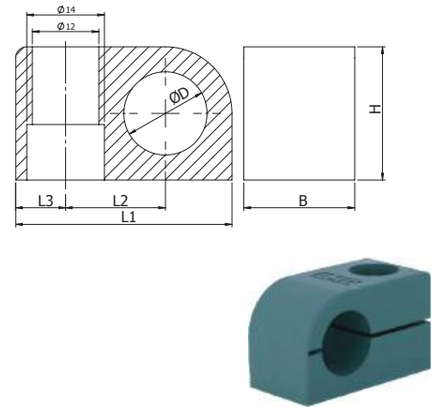

C	D	6	8	M	1	3	0	T	2	H	V	1	X	X	X	.	X
					Üstlük Cover Plate	Üstlük Kaplama Tipi Cover Plate Finishing	Altlık Kaplama Tipi Weld Plate Finishing	Gövde Malzemesi Clamp Body Material		Gövde Renk Clamp Body Colour		Grup Group			Ölçü Size		

C	2	T	2	H	V	1	X	X	X	.	X
		Gövde Malzemesi Clamp Body Material	Gövde Tipi Clamp Body Design	Gövde Renk Clamp Body Colour		Grup Group			Ölçü Size		

Grup Group	Dış Çap (ØD) O.D. of Pipe / Tube/Hose mm	Anma Çapı (R) Boru Diş Nominal Bore Pipe inch	Dış Çap (ØD) O.D. of Pipe / Tube/Hose inch	Ölçü Tablosu Dimension Table L1	L2	L3	H	B	Sipariş Kodu Order Code	Ölçü Tablosu Dimension Table L1	L2	L3	B	H	Sipariş Kodu Order Code
V1	6			40	34	21	23	20	CD68M130T2HV1006.0	34	15	9	20	20	C2T2HV1006.0
	6,4	1/4"							CD68M130T2HV1006.4						C2T2HV1006.4
	8	5/16"							CD68M130T2HV1008.0						C2T2HV1008.0
	9,5	3/8"							CD68M130T2HV1009.5						C2T2HV1009.5
	10		1/8"						CD68M130T2HV1010.0						C2T2HV1010.0
	11								CD68M130T2HV1011.0						C2T2HV1011.0
	12								CD68M130T2HV1012.0						C2T2HV1012.0
	12,7	1/2"							CD68M130T2HV1012.7						C2T2HV1012.7
V2	4			40	39	27	27	20	CD68M130T2HV2004.0	39	18	9	20	24	C2T2HV2004.0
	6								CD68M130T2HV2006.0						C2T2HV2006.0
	6,4	1/4"							CD68M130T2HV2006.4						C2T2HV2006.4
	8	5/16"							CD68M130T2HV2008.0						C2T2HV2008.0
	9,5	3/8"							CD68M130T2HV2009.5						C2T2HV2009.5
	10		1/8"						CD68M130T2HV2010.0						C2T2HV2010.0
	11								CD68M130T2HV2011.0						C2T2HV2011.0
	12								CD68M130T2HV2012.0						C2T2HV2012.0
	12,7	1/2"							CD68M130T2HV2012.7						C2T2HV2012.7
	13,5		1/4"						CD68M130T2HV2013.5						C2T2HV2013.5
	14								CD68M130T2HV2014.0						C2T2HV2014.0
	15								CD68M130T2HV2015.0						C2T2HV2015.0
	16	5/8"							CD68M130T2HV2016.0						C2T2HV2016.0
	17,2		3/8"						CD68M130T2HV2017.2						C2T2HV2017.2
	18								CD68M130T2HV2018.0						C2T2HV2018.0
	19	3/4"							CD68M130T2HV2019.0						C2T2HV2019.0
	20								CD68M130T2HV2020.0						C2T2HV2020.0
V3	21,3		1/2"	63,5	57,5	38,5	43	30	CD68M130T2HV3021.3	57,5	23,5	15	30	40	C2T2HV3021.3
	22	7/8"							CD68M130T2HV3022.0						C2T2HV3022.0
	23								CD68M130T2HV3023.0						C2T2HV3023.0
	25								CD68M130T2HV3025.0						C2T2HV3025.0
	25,4	1"							CD68M130T2HV3025.4						C2T2HV3025.4
	28								CD68M130T2HV3028.0						C2T2HV3028.0
	30								CD68M130T2HV3030.0						C2T2HV3030.0
	32	1-1/4"							CD68M130T2HV3032.0						C2T2HV3032.0

*** İstek üzerine, V serisi boru kelepçelerinin delikleri birbirinden farklı çaplarda da üretilebilmektedir.**

* In V series pipe clamps, the diameter of each pipe hole can be produced with different sizes upon request.

Metal + Kaplama Tipi Metal + Surface Finishing		Gövde Malzemesi Clamp Body Material	
0	Kaplamasız / Uncoated	A	Alüminyum / Aluminum
1	Fosfat / Phosphated / Fe/Znph	N	Polyamid / Polyamide
3	Galvaniz / Galvanized / Fe/Zn 8C Cr3-B	T	TPE
4	CrNi 304 AISI 304	P	Polipropilen / Polypropylene
6	CrNi 316 AISI 316		
9	Çinko Nikel / Zinc Nickel Fe/ZnNi		

Farklı malzeme talepleriniz için lütfen LMC Makina'ya danışınız.

For different material request please consult LMC Makina.

Alt Plaka / Weld Plate 71

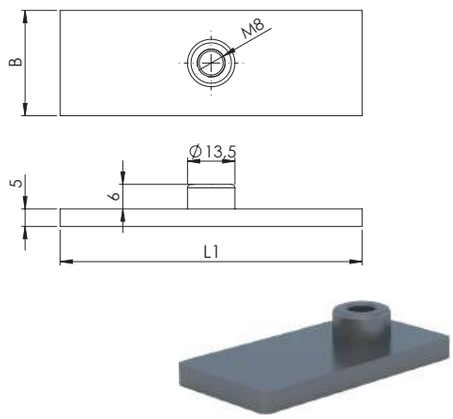

C	A	0	0	M	1	V	1
				Vida Tipi / Thread Type	Metal + Kaplama Tipi / Metal + Surface Finishing		Grup / Group

Üst Plaka / Cover Plate 72

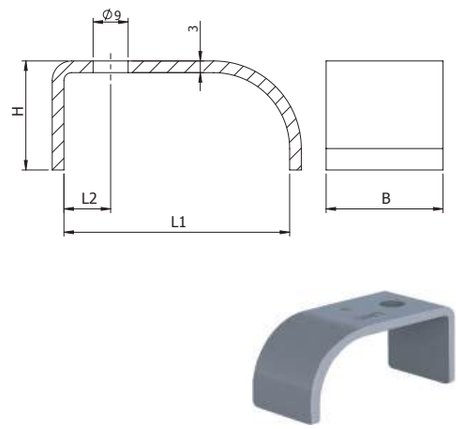

C	U	0	0	T	3	V	1
				Vida Tipi / Thread Type	Metal + Kaplama Tipi / Metal + Surface Finishing		Grup / Group

Grup Group	Dış Çap (ØD) O.D. of Pipe / Tube/Hose mm	Anma Çapı (R) Boru Diş Nominal Bore Pipe inch	Dış Çap (ØD) O.D. of Pipe / Tube/Hose inch	Ölçü Tablosu Dimension Table L1	L2	B	Sipariş Kodu Order Code	Ölçü Tablosu Dimension Table L1	L2	B	H	Sipariş Kodu Order Code
V1	6			34	9	20	CA00M1V1	34	9	20	16	CU00T3V1
	6,4	1/4"										
	8	5/16"										
	9,5	3/8"										
	10		1/8"									
	11											
	12											
	12,7	1/2"										
V2	4			39	9	20	CA00M1V2	39	9	20	20	CU00T3V2
	6											
	6,4	1/4"										
	8	5/16"										
	9,5	3/8"										
	10		1/8"									
	11											
	12											
	12,7	1/2"										
	13,5		1/4"									
	14											
	15											
	16	5/8"										
	17,2		3/8"									
	18											
	19	3/4"										
	20											
V3	21,3		1/2"	58	15	30	CA00M1V3	58	15	30	28	CU00T3V3
	22	7/8"										
	23											
	25											
	25,4	1"										
	28											
	30											
	32	1-1/4"										

Metal + Kaplama Tipi Metal + Surface Finishing		Gövde Malzemesi Clamp Body Material	
0	Kaplamasız / Uncoated	A	Alüminyum / Aluminum
1	Fosfat / Phosphated / Fe/Znph	N	Polyamid / Polyamide
3	Galvaniz / Galvanized / Fe/Zn 8C Cr3-B	T	TPE
4	CrNi 304 AISI 304	P	Polipropilen / Polypropylene
6	CrNi 316 AISI 316		
9	Çinko Nikel / Zinc Nickel Fe/ZnNi		

Farklı malzeme talepleriniz için lütfen LMC Makina'ya danışınız.

For different material request please consult LMC Makina.

Burç
Bush
73

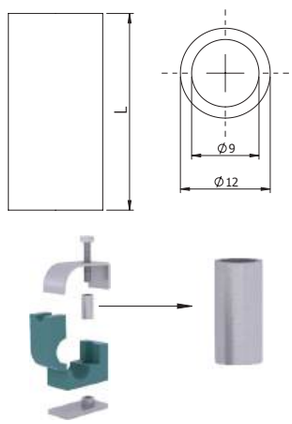

C T S B T 3 0 0 X X X

Vida Tipi / Thread Type
Metal + Kaplama Tipi / Metal + Surface Finishing

Burç
Bush
73

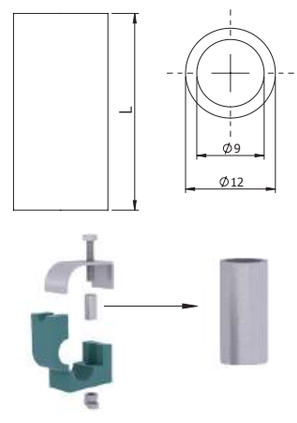

C T S B T 3 0 0 X X X

Vida Tipi / Thread Type
Metal + Kaplama Tipi / Metal + Surface Finishing

Burç
Bush
73

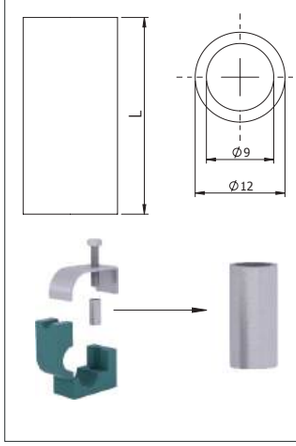

C T S B T 3 0 0 X X X

Vida Tipi / Thread Type
Metal + Kaplama Tipi / Metal + Surface Finishing

Grup Group	Dış Çap (ØD) O.D. of Pipe / Tube/Hose mm	Anma Çapı (R) Boru Diş Nominal Bore Pipe inch	Dış Çap (ØD) O.D. of Pipe / Tube/Hose inch	Ölçü Tablosu Dimension Table L1	Sipariş Kodu Order Code	Ölçü Tablosu Dimension Table L1	Sipariş Kodu Order Code	Ölçü Tablosu Dimension Table L1	Sipariş Kodu Order Code
V1	6			13,5	CTSBT300135	12,8	CTSBT300128	18,8	CTSBT300188
	6,4	1/4"							
	8	5/16"							
	9,5	3/8"							
	10		1/8"						
	11								
	12								
	12,7	1/2"							
V2	4			17,5	CTSBT300175	16,8	CTSBT300168	22,7	CTSBT300227
	6								
	6,4	1/4"							
	8	5/16"							
	9,5	3/8"							
	10		1/8"						
	11								
	12								
	12,7	1/2"							
	13,5		1/4"						
	14								
	15								
	16	5/8"							
	17,2		3/8"						
	18								
	19	3/4"							
	20								
V3	21,3		1/2"	33,5	CTSBT300335	32,8	CTSBT300328	38,8	CTSBT300388
	22	7/8"							
	23								
	25								
	25,4	1"							
	28								
	30								
	32	1-1/4"							

Metal + Kaplama Tipi Metal + Surface Finishing		Gövde Malzemesi Clamp Body Material	
0	Kaplamasız / Uncoated	A	Alüminyum / Aluminum
1	Fosfat / Phosphated / Fe/Znph	N	Polyamid / Polyamide
3	Galvaniz / Galvanized / Fe/Zn 8C Cr3-B	T	TPE
4	CrNi 304 AISI 304	P	Polipropilen / Polypropylene
6	CrNi 316 AISI 316		
9	Çinko Nikel / Zinc Nickel Fe/ZnNi		

Farklı malzeme talepleriniz için lütfen LMC Makina'ya danışınız.

For different material request please consult LMC Makina.

Komple Kelepçe / Complete Clamp 74

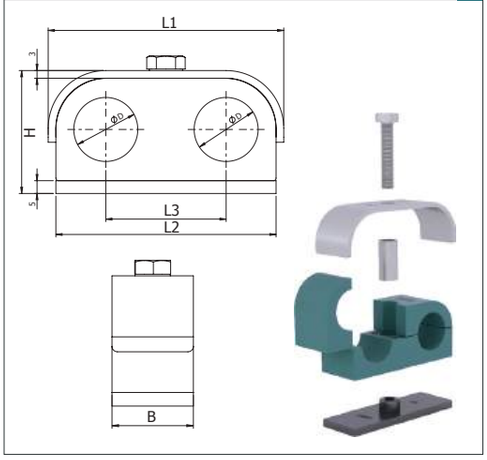

C M 4 0 M 1 3 1 T 2 H V I 1 X X X . X

- Üstlük Cover Plate
- Üstlük Kaplama Tipi Cover Plate Finishing
- Altlık Kaplama Tipi Weld Plate Finishing
- Gövde Malzemesi Clamp Body Material
- Gövde Renk Clamp Body Colour
- Grup Group
- Ölçü Size

Raya Uyumlu Üstlüklü Kelepçe / Clamp with Cover Plate + Rail Nut 75

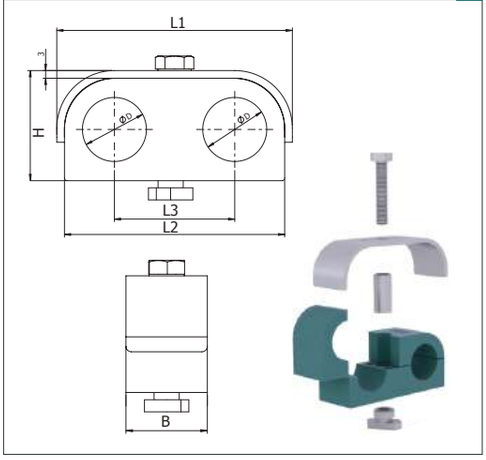

C D 7 0 M 1 3 3 T 2 H V I 1 X X X . X

- Üstlük Cover Plate
- Üstlük Kaplama Tipi Cover Plate Finishing
- Altlık Kaplama Tipi Weld Plate Finishing
- Gövde Malzemesi Clamp Body Material
- Gövde Renk Clamp Body Colour
- Grup Group
- Ölçü Size

Grup Group	Dış Çap (ØD) O.D. of Pipe / Tube/Hose mm	Anma Çapı (R) Boru Diş Nominal Bore Pipe inch	Dış Çap (ØD) O.D. of Pipe / Tube/Hose inch	Ölçü Tablosu Dimension Table L1	L2	L3	B	H	Sipariş Kodu Order Code	Ölçü Tablosu Dimension Table L1	L2	L3	B	H	Sipariş Kodu Order Code
VI1	6			56	50	30	20	28	CM40M131T2HVI1006.0	56	50	30	20	23	CD70M133T2HVI1006.0
	6,4	1/4"							CM40M131T2HVI1006.4						CD70M133T2HVI1006.4
	8	5/16"							CM40M131T2HVI1008.0						CD70M133T2HVI1008.0
	9,5	3/8"							CM40M131T2HVI1009.5						CD70M133T2HVI1009.5
	10		1/8"						CM40M131T2HVI1010.0						CD70M133T2HVI1010.0
	11								CM40M131T2HVI1011.0						CD70M133T2HVI1011.0
	12								CM40M131T2HVI1012.0						CD70M133T2HVI1012.0
	12,7	1/2"							CM40M131T2HVI1012.7						CD70M133T2HVI1012.7
VI2	4			65	59	35	20	32	CM40M131T2HVI2004.0	65	59	35	20	27	CD70M133T2HVI2004.0
	6								CM40M131T2HVI2006.0						CD70M133T2HVI2006.0
	6,4	1/4"							CM40M131T2HVI2006.4						CD70M133T2HVI2006.4
	8	5/16"							CM40M131T2HVI2008.0						CD70M133T2HVI2008.0
	9,5	3/8"							CM40M131T2HVI2009.5						CD70M133T2HVI2009.5
	10		1/8"						CM40M131T2HVI2010.0						CD70M133T2HVI2010.0
	11								CM40M131T2HVI2011.0						CD70M133T2HVI2011.0
	12								CM40M131T2HVI2012.0						CD70M133T2HVI2012.0
	12,7	1/2"							CM40M131T2HVI2012.7						CD70M133T2HVI2012.7
	13,5		1/4"						CM40M131T2HVI2013.5						CD70M133T2HVI2013.5
	14								CM40M131T2HVI2014.0						CD70M133T2HVI2014.0
	15								CM40M131T2HVI2015.0						CD70M133T2HVI2015.0
	16	5/8"							CM40M131T2HVI2016.0						CD70M133T2HVI2016.0
	17,2		3/8"						CM40M131T2HVI2017.2						CD70M133T2HVI2017.2
	18								CM40M131T2HVI2018.0						CD70M133T2HVI2018.0
	19	3/4"							CM40M131T2HVI2019.0						CD70M133T2HVI2019.0
	20								CM40M131T2HVI2020.0						CD70M133T2HVI2020.0
VI3	21,3		1/2"	92	86	47	30	48	CM40M131T2HVI3021.3	92	86	47	30	43	CD70M133T2HVI3021.3
	22	7/8"							CM40M131T2HVI3022.0						CD70M133T2HVI3022.0
	23								CM40M131T2HVI3023.0						CD70M133T2HVI3023.0
	25								CM40M131T2HVI3025.0						CD70M133T2HVI3025.0
	25,4	1"							CM40M131T2HVI3025.4						CD70M133T2HVI3025.4
	28								CM40M131T2HVI3028.0						CD70M133T2HVI3028.0
	30								CM40M131T2HVI3030.0						CD70M133T2HVI3030.0
	32	1-1/4"							CM40M131T2HVI3032.0						CD70M133T2HVI3032.0

Metal + Kaplama Tipi Metal + Surface Finishing		Gövde Malzemesi Clamp Body Material	
0	Kaplamasız / Uncoated	A	Alüminyum / Aluminum
1	Fosfat / Phosphated / Fe/Znph	N	Polyamid / Polyamide
3	Galvaniz / Galvanized / Fe/Zn 8C Cr3-B	T	TPE
4	CrNi 304 AISI 304	P	Polipropilen / Polypropylene
6	CrNi 316 AISI 316		
9	Çinko Nikel / Zinc Nickel Fe/ZnNi		

Farklı malzeme talepleriniz için lütfen LMC Makina'ya danışınız.

For different material request please consult LMC Makina.

Göve + Civata + Üstlük
Clamp Body + Bolt + Cover Plate **76**

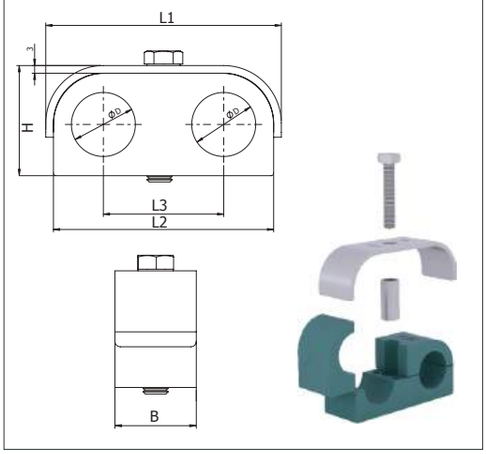

C D 6 8 M 1 3 0 T 2 H V I 1 X X X . X

- Üstlük — Cover Plate
- Üstlük Kaplama Tipi — Cover Plate Finishing
- Altlık Kaplama Tipi — Weld Plate Finishing
- Gövde Malzemesi — Clamp Body Material
- Gövde Renk — Clamp Body Colour
- Grup — Group
- Ölçü — Size

Kelepçe Gövdesi
Clamp Body **77**

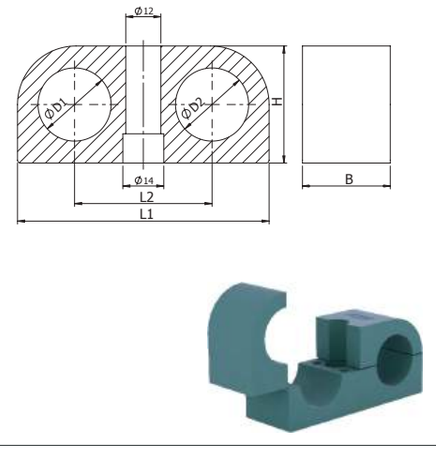

C 2 T 2 H V I 1 X X X . X

- Gövde Malzemesi — Clamp Body Material
- Gövde Tipi — Clamp Body Design
- Gövde Renk — Clamp Body Colour
- Grup — Group
- Ölçü — Size

Grup Group	Dış Çap (ØD) O.D. of Pipe / Tube/Hose mm	Anma Çapı (R) Boru Diş Nominal Bore Pipe inch	Dış Çap (ØD) O.D. of Pipe / Tube/Hose inch	Ölçü Tablosu Dimension Table L1	L2	L3	B	H	Sipariş Kodu Order Code
VI1	6			56	50	30	20	23	CD68M130T2HVI1006.0
	6,4	1/4"							CD68M130T2HVI1006.4
	8	5/16"							CD68M130T2HVI1008.0
	9,5	3/8"							CD68M130T2HVI1009.5
	10		1/8"						CD68M130T2HVI1010.0
	11								CD68M130T2HVI1011.0
	12								CD68M130T2HVI1012.0
	12,7	1/2"							CD68M130T2HVI1012.7
VI2	4			65	59	35	20	27	CD68M130T2HVI2004.0
	6								CD68M130T2HVI2006.0
	6,4	1/4"							CD68M130T2HVI2006.4
	8	5/16"							CD68M130T2HVI2008.0
	9,5	3/8"							CD68M130T2HVI2009.5
	10		1/8"						CD68M130T2HVI2010.0
	11								CD68M130T2HVI2011.0
	12								CD68M130T2HVI2012.0
	12,7	1/2"							CD68M130T2HVI2012.7
	13,5		1/4"						CD68M130T2HVI2013.5
	14								CD68M130T2HVI2014.0
	15								CD68M130T2HVI2015.0
	16	5/8"							CD68M130T2HVI2016.0
	17,2		3/8"						CD68M130T2HVI2017.2
	18								CD68M130T2HVI2018.0
	19	3/4"							CD68M130T2HVI2019.0
	20								CD68M130T2HVI2020.0
VI3	21,3		1/2"	92	86	47	30	43	CD68M130T2HVI3021.3
	22	7/8"							CD68M130T2HVI3022.0
	23								CD68M130T2HVI3023.0
	25								CD68M130T2HVI3025.0
	25,4	1"							CD68M130T2HVI3025.4
	28								CD68M130T2HVI3028.0
	30								CD68M130T2HVI3030.0
	32	1-1/4"							CD68M130T2HVI3032.0

Ölçü Tablosu Dimension Table L1	L2	B	H	Sipariş Kodu Order Code
50	30	20	20	C2T2HVI1006.0
				C2T2HVI1006.4
				C2T2HVI1008.0
				C2T2HVI1009.5
				C2T2HVI1010.0
				C2T2HVI1011.0
				C2T2HVI1012.0
				C2T2HVI1012.7
59	35	20	24	C2T2HVI2004.0
				C2T2HVI2006.0
				C2T2HVI2006.4
				C2T2HVI2008.0
				C2T2HVI2009.5
				C2T2HVI2010.0
				C2T2HVI2011.0
				C2T2HVI2012.0
				C2T2HVI2012.7
				C2T2HVI2013.5
				C2T2HVI2014.0
				C2T2HVI2015.0
				C2T2HVI2016.0
				C2T2HVI2017.2
				C2T2HVI2018.0
				C2T2HVI2019.0
				C2T2HVI2020.0
86	47	30	40	C2T2HVI3021.3
				C2T2HVI3022.0
				C2T2HVI3023.0
				C2T2HVI3025.0
				C2T2HVI3025.4
				C2T2HVI3028.0
				C2T2HVI3030.0
				C2T2HVI3032.0

Metal + Kaplama Tipi Metal + Surface Finishing		Gövde Malzemesi Clamp Body Material	
0	Kaplamasız / Uncoated	A	Alüminyum / Aluminum
1	Fosfat / Phosphated / Fe/Znph	N	Polyamid / Polyamide
3	Galvaniz / Galvanized / Fe/Zn 8C Cr3-B	T	TPE
4	CrNi 304 AISI 304	P	Polipropilen / Polypropylene
6	CrNi 316 AISI 316		
9	Çinko Nikel / Zinc Nickel Fe/ZnNi		

Farklı malzeme talepleriniz için lütfen LMC Makina'ya danışınız.

For different material request please consult LMC Makina.

Alt Plaka / Weld Plate — 78

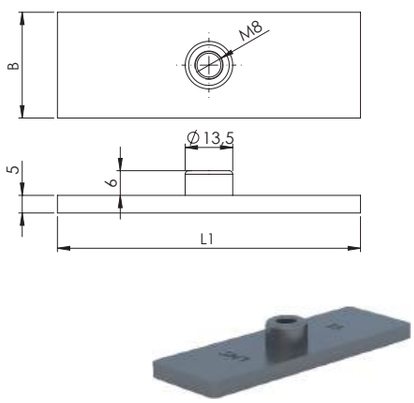

C	A	0	0	M	1	V	I	1
				Vida Tipi Thread Type	Metal + Kaplama Tipi Metal + Surface Finishing		Grup Group	

Üst Plaka / Cover Plate — 79

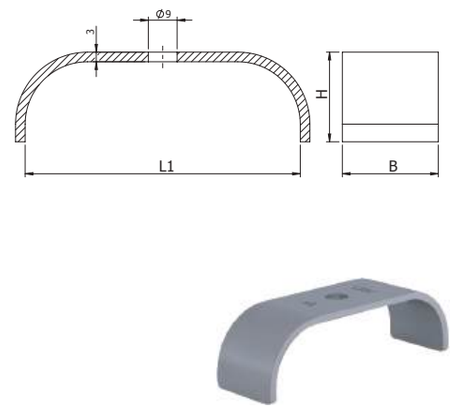

C	U	0	0	T	3	V	I	1
				Vida Tipi Thread Type	Metal + Kaplama Tipi Metal + Surface Finishing		Grup Group	

Grup Group	Dış Çap (ØD) O.D. of Pipe / Tube/Hose mm	Anma Çapı (R) Boru Diş Nominal Bore Pipe inch	Dış Çap (ØD) O.D. of Pipe / Tube/Hose inch	Ölçü Tablosu Dimension Table L1	B	Sipariş Kodu Order Code	Ölçü Tablosu Dimension Table L1	B	H	Sipariş Kodu Order Code
VI1	6			50	20	CA00M1VI1	50	20	16	CU00T3VI1
	6,4	1/4"								
	8	5/16"								
	9,5	3/8"								
	10		1/8"							
	11									
	12									
	12,7	1/2"								
VI2	4			59	20	CA00M1VI2	60	20	20	CU00T3VI2
	6									
	6,4	1/4"								
	8	5/16"								
	9,5	3/8"								
	10		1/8"							
	11									
	12									
	12,7	1/2"								
	13,5		1/4"							
	14									
	15									
	16	5/8"								
	17,2		3/8"							
	18									
	19	3/4"								
	20									
VI3	21,3		1/2"	86	30	CA00M1VI3	87	30	28	CU00T3VI3
	22	7/8"								
	23									
	25									
	25,4	1"								
	28									
	30									
	32	1-1/4"								

Metal + Kaplama Tipi Metal + Surface Finishing		Gövde Malzemesi Clamp Body Material	
0	Kaplamasız / Uncoated	A	Alüminyum / Aluminum
1	Fosfat / Phosphated / Fe/Znph	N	Polyamid / Polyamide
3	Galvaniz / Galvanized / Fe/Zn 8C Cr3-B	T	TPE
4	CrNi 304 AISI 304	P	Polipropilen / Polypropylene
6	CrNi 316 AISI 316		
9	Çinko Nikel / Zinc Nickel Fe/ZnNi		

Farklı malzeme talepleriniz için lütfen LMC Makina'ya danışınız.

For different material request please consult LMC Makina.

Burç / Bush — **80**

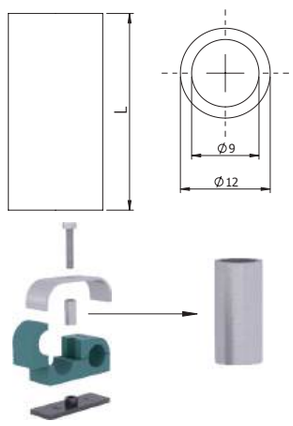

C T S B T 3 0 0 X X X

Vida Tipi / Thread Type — Metal + Kaplama Tipi / Metal + Surface Finishing

Burç / Bush — **80**

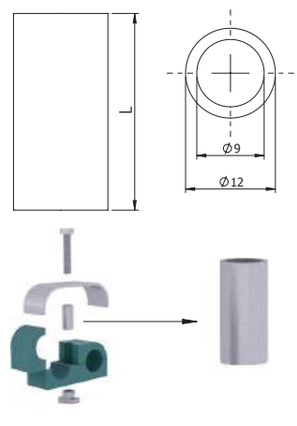

C T S B T 3 0 0 X X X

Vida Tipi / Thread Type — Metal + Kaplama Tipi / Metal + Surface Finishing

Burç / Bush — **80**

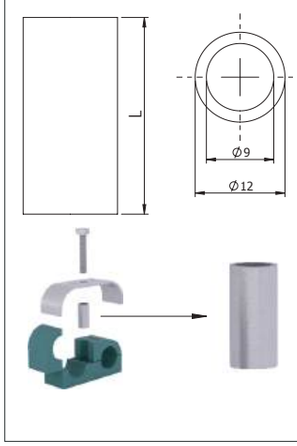

C T S B T 3 0 0 X X X

Vida Tipi / Thread Type — Metal + Kaplama Tipi / Metal + Surface Finishing

Grup Group	Dış Çap (ØD) O.D. of Pipe / Tube/Hose mm	Anma Çapı (R) Boru Diş Nominal Bore Pipe inch	Dış Çap (ØD) O.D. of Pipe / Tube/Hose inch	Ölçü Tablosu Dimension Table L1	Sipariş Kodu Order Code	Ölçü Tablosu Dimension Table L1	Sipariş Kodu Order Code	Ölçü Tablosu Dimension Table L1	Sipariş Kodu Order Code
VI1	6			13,5	CTSBT300135	12,8	CTSBT300128	18,8	CTSBT300188
	6,4	1/4"							
	8	5/16"							
	9,5	3/8"							
	10		1/8"						
	11								
	12								
	12,7	1/2"							
VI2	4			17,5	CTSBT300175	16,8	CTSBT300168	22,7	CTSBT300227
	6								
	6,4	1/4"							
	8	5/16"							
	9,5	3/8"							
	10		1/8"						
	11								
	12								
	12,7	1/2"							
	13,5		1/4"						
	14								
	15								
	16	5/8"							
	17,2		3/8"						
	18								
	19	3/4"							
	20								
VI3	21,3		1/2"	33,5	CTSBT300335	32,8	CTSBT300328	38,8	CTSBT300388
	22	7/8"							
	23								
	25								
	25,4	1"							
	28								
	30								
	32	1-1/4"							

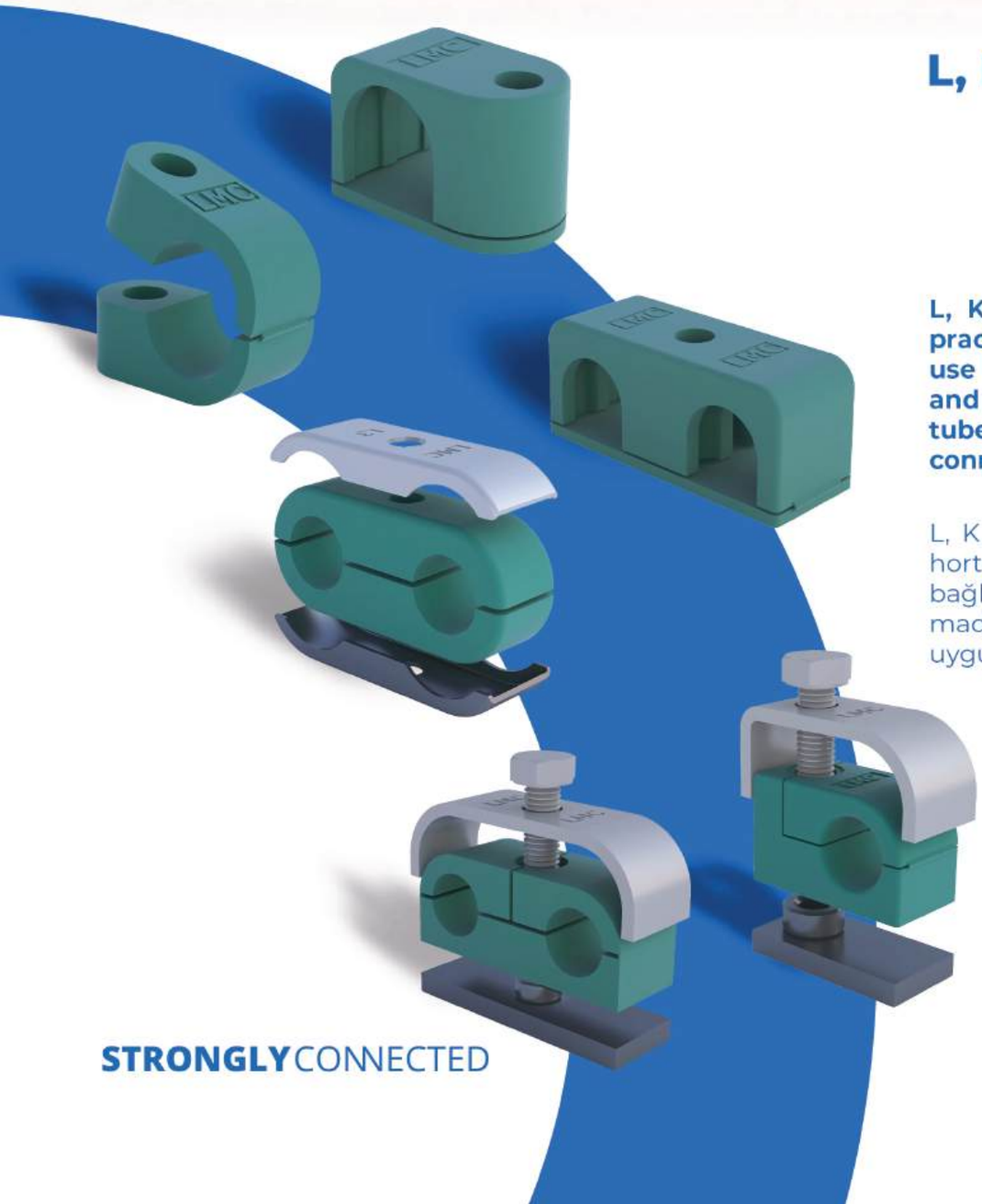

L, K AND V SERIES CLAMPS

L, K VE V SERİSİ KELEPÇELER

L, K and V Series Clamps are practical products suitable for use in construction, agriculture and mining machinery where tubes, hoses and cables are connected.

L, K ve V Serisi Kelepçeler, boru, hortum ve kabloların birbirine bağlandığı inşaat, tarım ve maden makinelerinde kullanıma uygun ve pratik ürünlerdir.

STRONGLYCONNECTED

LMC

LMC®

MODÜLER KABLO KELEPÇESİ

MODULER CABLE CLAMP

lmcmakina.com.tr

Metal + Kaplama Tipi Metal + Surface Finishing		Gövde Malzemesi Clamp Body Material	
0	Kaplamasız / Uncoated	A	Alüminyum / Aluminum
1	Fosfat / Phosphated / Fe/Znph	N	Polyamid / Polyamide
3	Galvaniz / Galvanized / Fe/Zn 8C Cr3-B	T	TPE
4	CrNi 304 AISI 304	P	Polipropilen / Polypropylene
6	CrNi 316 AISI 316		
9	Çinko Nikel / Zinc Nickel Fe/ZnNi		

Farklı malzeme talepleriniz için lütfen LMC Makina'ya danışınız.

For different material request please consult LMC Makina.

Kelepçe Gövdesi
Clamp Body

81

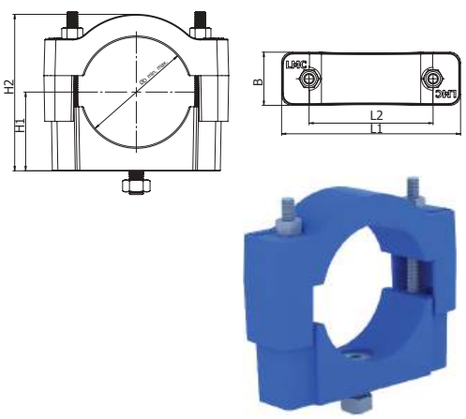

Ölçü Tablosu
Dimension Table

	ØD	L1	L2	B	H2	H1
CE99M03P2M0006	min - Ø35 max - Ø47	14,5	13,5	6,8	45 57	33
CE99M03P2M0008	min - Ø45 max - Ø60	101	70	30	71 86	43

LMC®

DİĞER KELEPÇELER
OTHER CLAMPS

Komple Kelepçe
Complete Clamp
82

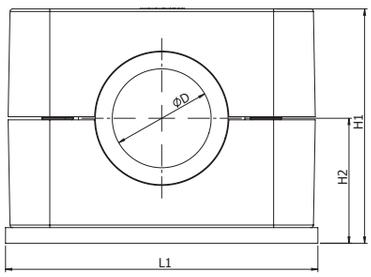

Montaj Delikli Kelepçe
Complete Clamp with Elongated Weld Plate
83

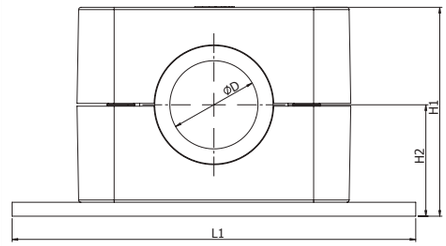

Grup Group	Çap Diameter ØD mm	ØD1 mm	Ölçü Tablosu Dimension Table L1	H1	H2	Sipariş Kodu Order Code
G4	6	-	59	45	24	CM00M001P4HG4006.0
	6,4					CM00M001P4HG4006.4
	8					CM00M001P4HG4008.0
	9,5					CM00M001P4HG4009.5
	10					CM00M001P4HG4010.0
	12					CM00M001P4HG4012.0
	12,7					CM00M001P4HG4012.7
	13,5					CM00M001P4HG4013.5
	14					CM00M001P4HG4014.0
	15					CM00M001P4HG4015.0
	16					CM00M001P4HG4016.0
	17,2					CM00M001P4HG4017.2
	18					CM00M001P4HG4018.0
	19					CM00M001P4HG4019.0
G6	20	-	86	69	36	CM00M001P4HG6020.0
	21,3					CM00M001P4HG6021.3
	22					CM00M001P4HG6022.0
	25					CM00M001P4HG6023.0
	25,4					CM00M001P4HG6025.0
	26,9					CM00M001P4HG6026.9
	28					CM00M001P4HG6028.0
	30					CM00M001P4HG6030.0
	32					CM00M001P4HG6032.0

Grup Group	Çap Diameter ØD mm	ØD1 mm	Ölçü Tablosu Dimension Table L1	H1	H2	Sipariş Kodu Order Code
G4	6	-	87	45	24	CM01M001P4HG4006.0
	6,4					CM01M001P4HG4006.4
	8					CM01M001P4HG4008.0
	9,5					CM01M001P4HG4009.5
	10					CM01M001P4HG4010.0
	12					CM01M001P4HG4012.0
	12,7					CM01M001P4HG4012.7
	13,5					CM01M001P4HG4013.5
	14					CM01M001P4HG4014.0
	15					CM01M001P4HG4015.0
	16					CM01M001P4HG4016.0
	17,2					CM01M001P4HG4017.2
	18					CM01M001P4HG4018.0
	19					CM01M001P4HG4019.0
G6	20	-	115	69	36	CM01M001P4HG6020.0
	21,3					CM01M001P4HG6021.3
	22					CM01M001P4HG6022.0
	25					CM01M001P4HG6025.0
	25,4					CM01M001P4HG6025.4
	26,9					CM01M001P4HG6026.9
	28					CM01M001P4HG6028.0
	30					CM01M001P4HG6030.0
	32					CM01M001P4HG6032.0

Gövde Malzemesi Clamp Body Material	
N	Polyamid / Polyamide
P	Polipropilen / Polypropylene

Elastomer Elastomer Insert	
T	TPE 60 Shore A
	Termoplastik Elastomer Thermoplastic Elastomer

*** Elastomer Göbek sipariş kodları için sayfa 4'e bakınız.**
* See page 4 for Elastomer Insert order codes.

Çift Plakalı Kelepçe
Double Plated Clamp

84

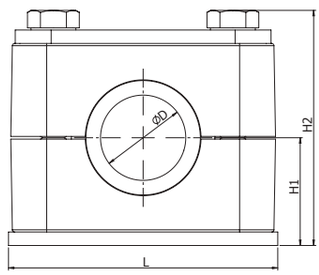

Çift Plakalı Montaj Delikli Kelepçe
Double Plated Clamp with Elongated Weld Plate

85

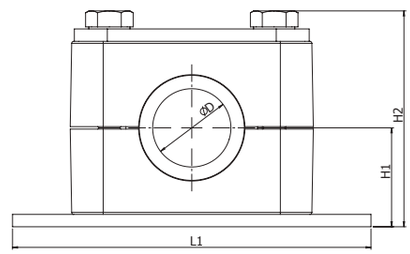

Grup Group	Çap Diameter ØD mm	ØD1 mm	Ölçü Tablosu Dimension Table L1	H1	H2	Sipariş Kodu Order Code
G4	6	-	59	24	52	CM40M131P4HG4006.0
	6,4					CM40M131P4HG4006.4
	8					CM40M131P4HG4008.0
	9,5					CM40M131P4HG4009.5
	10					CM40M131P4HG4010.0
	12					CM40M131P4HG4012.0
	12,7					CM40M131P4HG4012.7
	13,5					CM40M131P4HG4013.5
	14					CM40M131P4HG4014.0
	15					CM40M131P4HG4015.0
	16					CM40M131P4HG4016.0
	17,2					CM40M131P4HG4017.2
	18					CM40M131P4HG4018.0
	19					CM40M131P4HG4019.0
G6	20	-	86	36	76	CM40M131P4HG6020.0
	21,3					CM40M131P4HG6021.3
	22					CM40M131P4HG6022.0
	25					CM40M131P4HG6025.0
	25,4					CM40M131P4HG6025.4
	26,9					CM40M131P4HG6026.9
	28					CM40M131P4HG6028.0
	30					CM40M131P4HG6030.0
	32					CM40M131P4HG6032.0

Grup Group	Çap Diameter ØD mm	ØD1 mm	Ölçü Tablosu Dimension Table L1	H1	H2	Sipariş Kodu Order Code
G4	6	-	87	24	52	CM41M131P4HG4006.0
	6,4					CM41M131P4HG4006.4
	8					CM41M131P4HG4008.0
	9,5					CM41M131P4HG4009.5
	10					CM41M131P4HG4010.0
	12					CM41M131P4HG4012.0
	12,7					CM41M131P4HG4012.7
	13,5					CM41M131P4HG4013.5
	14					CM41M131P4HG4014.0
	15					CM41M131P4HG4015.0
	16					CM41M131P4HG4016.0
	17,2					CM41M131P4HG4017.2
	18					CM41M131P4HG4018.0
	19					CM41M131P4HG4019.0
G6	20	-	115	36	76	CM41M131P4HG6020.0
	21,3					CM41M131P4HG6021.3
	22					CM41M131P4HG6022.0
	25					CM41M131P4HG6025.0
	25,4					CM41M131P4HG6025.4
	26,9					CM41M131P4HG6026.9
	28					CM41M131P4HG6028.0
	30					CM41M131P4HG6030.0
	32					CM41M131P4HG6032.0

Gövde Malzemesi Clamp Body Material	
N	Polyamid / Polyamide
P	Polipropilen / Polypropylene

Elastomer Elastomer Insert	
T	TPE 60 Shore A
	Termoplastik Elastomer Thermoplastic Elastomer

*** Elastomer Göbek sipariş kodları için sayfa 4'e bakınız.**
* See page 4 for Elastomer Insert order codes.

Kelepçe Gövdesi
Clamp Body
86

Grup Group	Çap Diameter ØD mm	ØD1 mm	Sipariş Kodu Order Code: Kelepçe Gövdesi Clamp Body	Gövde + Elastomer Body + Elastomer
G4	6	25.5	C2P4HG4000.0	CDaaT000P4HG4006.0
	6.4			CDaaT000P4HG4006.4
	8			CDaaT000P4HG4008.0
	9.5			CDaaT000P4HG4009.5
	10			CDaaT000P4HG4010.0
	12			CDaaT000P4HG4012.0
	12.7			CDaaT000P4HG4012.7
	13.5			CDaaT000P4HG4013.5
	14			CDaaT000P4HG4014.0
	15			CDaaT000P4HG4015.0
	16			CDaaT000P4HG4016.0
	17.2			CDaaT000P4HG4017.2
	18			CDaaT000P4HG4018.0
	19			CDaaT000P4HG4019.0
G6	20	39	C2P4HG6000.0	CDaaT000P4HG6020.0
	21.3			CDaaT000P4HG6021.3
	22			CDaaT000P4HG6022.0
	23			CDaaT000P4HG6023.0
	25			CDaaT000P4HG6025.0
	25.4			CDaaT000P4HG6025.4
	26.9			CDaaT000P4HG6026.9
	28			CDaaT000P4HG6028.0
	30			CDaaT000P4HG6030.0
	32			CDaaT000P4HG6032.0

Gövde Malzemesi Clamp Body Material	
N	Polyamid / Polyamide
P	Polipropilen / Polypropylene

Elastomer Elastomer Insert	
T	TPE 60 Shore A
	Termoplastik Elastomer Thermoplastic Elastomer

*** Elastomer Göbek sipariş kodları için sayfa 4'e bakınız.**
* See page 4 for Elastomer Insert order codes.

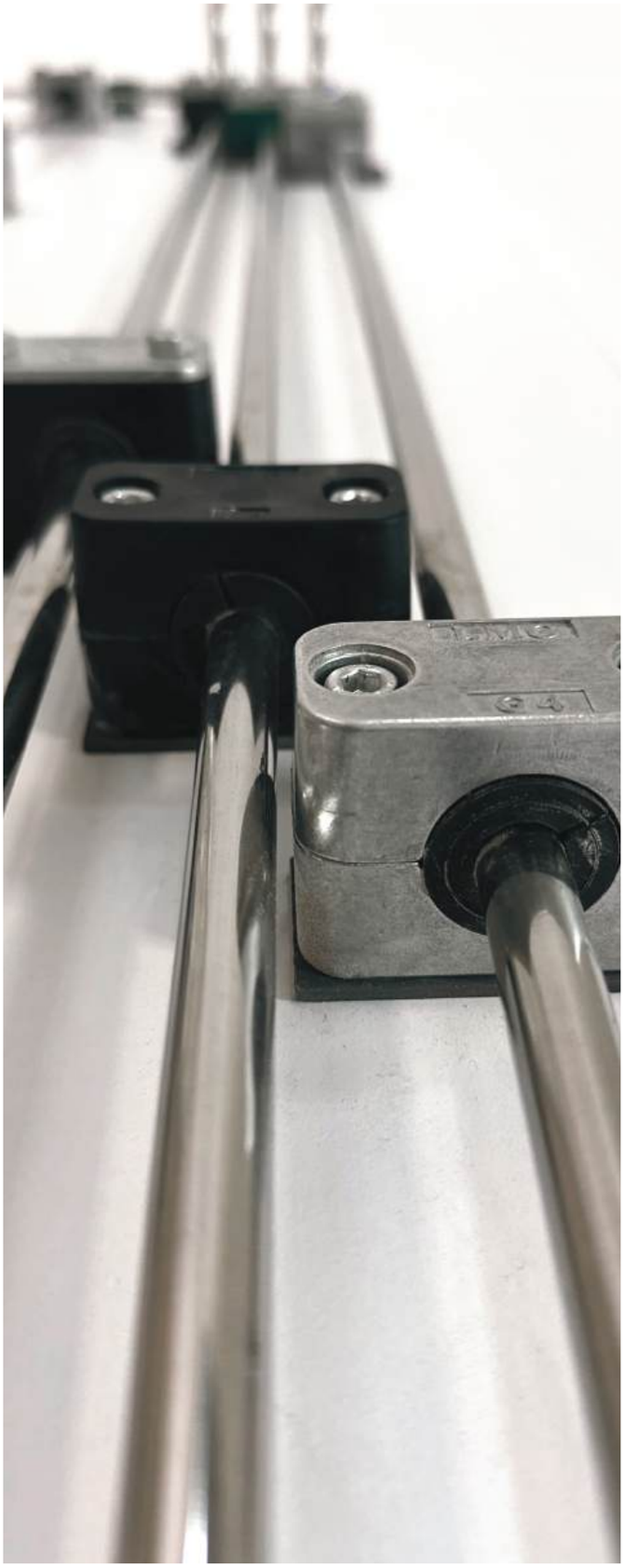

Çift Plakalı Kelepçe
Double Plated Clamp

87

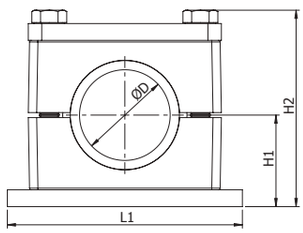

Grup Group	Çap Diameter ØD mm	ØD1 mm	Ölçü Tablosu Dimension Table L1	H1	H2	Gövde + Elastomer Body + Elastomer
A2	6	-	86	32	71	CM40M131P4HA2006.0
	6,4					CM40M131P4HA2006.4
	8					CM40M131P4HA2008.0
	9,5					CM40M131P4HA2009.5
	10					CM40M131P4HA2010.0
	12					CM40M131P4HA2012.0
	12,7					CM40M131P4HA2012.7
	13,5					CM40M131P4HA2013.5
	14					CM40M131P4HA2014.0
	15					CM40M131P4HA2015.0
	16					CM40M131P4HA2016.0
	17,2					CM40M131P4HA2017.2
	18					CM40M131P4HA2018.0
	19					CM40M131P4HA2019.0
A3	20	-	100	38	83	CM40M131P4HA3020.0
	21,3					CM40M131P4HA3021.3
	22					CM40M131P4HA3022.0
	25					CM40M131P4HA3025.0
	25,4					CM40M131P4HA3025.4
	26,9					CM40M131P4HA3026.9
	28					CM40M131P4HA3028.0
	30					CM40M131P4HA3030.0
	32					CM40M131P4HA3032.0
A4	32	-	140	54,5	117	CM40M131P4HA4032.0
	33,7					CM40M131P4HA4033.7
	35					CM40M131P4HA4035.0
	38					CM40M131P4HA4038.0
	40					CM40M131P4HA4040.0
	42					CM40M131P4HA4042.0
	44,5					CM40M131P4HA4044.5
	48,3					CM40M131P4HA4048.3
	50,8					CM40M131P4HA4050.8
	55					CM40M131P4HA4055.0
	57					CM40M131P4HA4057.0
A5	57	-	180	70	150	CM40M131P4HA5057.0
	60,3					CM40M131P4HA5060.3
	63,5					CM40M131P4HA5063.5
	65					CM40M131P4HA5065.0
	70					CM40M131P4HA5070.0
	73					CM40M131P4HA5073.0
	76,1					CM40M131P4HA5076.1
A6	80,1	-	226	99	211	CM40M131P4HA6080.0
	82,5					CM40M131P4HA6082.5
	88,9					CM40M131P4HA6088.9
	100					CM40M131P4HA6100.0
	101,6					CM40M131P4HA6101.6
A7	108	-	270	115	245	CM40M131P4HA7108.0
	114,3					CM40M131P4HA7114.3
	127					CM40M131P4HA7127.0
	133					CM40M131P4HA7133.0
A8	168	-	340	160	339	CM40M131P4HA8168.3
	193,7					CM40M131P4HA8193.7
	219,1					CM40M131P4HA8219.1

Çift Plakalı Montaj Delikli Kelepçe
Double Plated Clamp with Elongated Weld Plate

88

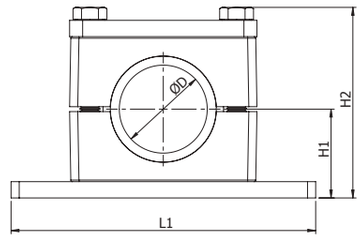

Grup Group	Çap Diameter ØD mm	ØD1 mm	Ölçü Tablosu Dimension Table L1	H1	H2	Gövde + Elastomer Body + Elastomer
A2	6	-	125	32	71	CM41M131P4HA2006.0
	6,4					CM41M131P4HA2006.4
	8					CM41M131P4HA2008.0
	9,5					CM41M131P4HA2009.5
	10					CM41M131P4HA2010.0
	12					CM41M131P4HA2012.0
	12,7					CM41M131P4HA2012.7
	13,5					CM41M131P4HA2013.5
	14					CM41M131P4HA2014.0
	15					CM41M131P4HA2015.0
	16					CM41M131P4HA2016.0
	17,2					CM41M131P4HA2017.2
	18					CM41M131P4HA2018.0
	19					CM41M131P4HA2019.0
A3	20	-	140	38	83	CM41M131P4HA3020.0
	21,3					CM41M131P4HA3021.3
	22					CM41M131P4HA3022.0
	25					CM41M131P4HA3025.0
	25,4					CM41M131P4HA3025.4
	26,9					CM41M131P4HA3026.9
	28					CM41M131P4HA3028.0
	30					CM41M131P4HA3030.0
	32					CM41M131P4HA3032.0
A4	32	-	187	54,5	117	CM41M131P4HA4032.0
	33,7					CM41M131P4HA4033.7
	35					CM41M131P4HA4035.0
	38					CM41M131P4HA4038.0
	40					CM41M131P4HA4040.0
	42					CM41M131P4HA4042.0
	44,5					CM41M131P4HA4044.5
	48,3					CM41M131P4HA4048.3
	50,8					CM41M131P4HA4050.8
	55					CM41M131P4HA4055.0
	57					CM41M131P4HA4057.0
A5	57	-	238	70	150	CM41M131P4HA5057.0
	60,3					CM41M131P4HA5060.3
	63,5					CM41M131P4HA5063.5
	65					CM41M131P4HA5065.0
	70					CM41M131P4HA5070.0
	73					CM41M131P4HA5073.0
	76,1					CM41M131P4HA5076.1
A6	80,1	-	309	99	211	CM41M131P4HA6080.0
	82,5					CM41M131P4HA6082.5
	88,9					CM41M131P4HA6088.9
	100					CM41M131P4HA6100.0
	101,6					CM41M131P4HA6101.6
A7	108	-	307	115	245	CM41M131P4HA7108.0
	114,3					CM41M131P4HA7114.3
	127					CM41M131P4HA7127.0
	133					CM41M131P4HA7133.0
A8	168	-	440	160	339	CM41M131P4HA8168.3
	193,7					CM41M131P4HA8193.7
	219,1					CM41M131P4HA8219.1

Kelepçe Gövdesi
Clamp Body
89

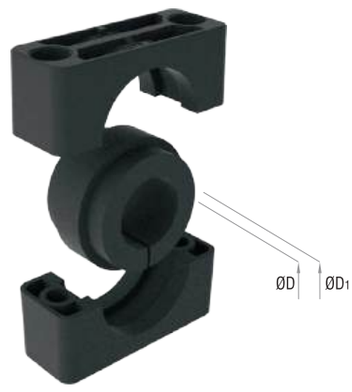

Grup Group	Çap Diameter ØD mm	ØD1 mm	Sipariş Kodu Order Code: Kelepçe Gövdesi Clamp Body	Gövde + Elastomer Body + Elastomer
A2	6	25.5	C2P4HA2000.0	CDaaT000P4HA2006.0
	6.4			CDaaT000P4HA2006.4
	8			CDaaT000P4HA2008.0
	9.5			CDaaT000P4HA2009.5
	10			CDaaT000P4HA2010.0
	12			CDaaT000P4HA2012.0
	12.7			CDaaT000P4HA2012.7
	13.5			CDaaT000P4HA2013.5
	14			CDaaT000P4HA2014.0
	15			CDaaT000P4HA2015.0
	16			CDaaT000P4HA2016.0
	17.2			CDaaT000P4HA2017.2
	18			CDaaT000P4HA2018.0
	19			CDaaT000P4HA2019.0
A3	20	39	C2P4HA3000.0	CDaaT000P4HA3020.0
	21.3			CDaaT000P4HA3021.3
	22			CDaaT000P4HA3022.0
	25			CDaaT000P4HA3025.0
	25.4			CDaaT000P4HA3025.4
	26.9			CDaaT000P4HA3026.9
	28			CDaaT000P4HA3028.0
	30			CDaaT000P4HA3030.0
	32			CDaaT000P4HA3032.0
A4	32	65	C2P4HA4000.0	CDaaT000P4HA4032.0
	33.7			CDaaT000P4HA4033.7
	35			CDaaT000P4HA4035.0
	38			CDaaT000P4HA4038.0
	40			CDaaT000P4HA4040.0
	42			CDaaT000P4HA4042.0
	44.5			CDaaT000P4HA4044.5
	48.3			CDaaT000P4HA4048.3
	50.8			CDaaT000P4HA4050.8
	55			CDaaT000P4HA4055.0
	57			CDaaT000P4HA4057.0
A5	57	89	C2P4HA5000.0	CDaaT000P4HA5057.0
	60.3			CDaaT000P4HA5060.3
	63.5			CDaaT000P4HA5063.5
	65			CDaaT000P4HA5065.0
	70			CDaaT000P4HA5070.0
	73			CDaaT000P4HA5073.0
	76.1			CDaaT000P4HA5076.1
A6	80	116	C2P4HA6000.0	CDaaT000P4HA6080.0
	82.5			CDaaT000P4HA6082.5
	88.9			CDaaT000P4HA6088.9
	100			CDaaT000P4HA6100.0
	101.6			CDaaT000P4HA6101.6
A7	108	152	C2P4HA7000.0	CDaaT000P4HA7108.0
	114.3			CDaaT000P4HA7114.3
	127			CDaaT000P4HA7127.0
	133			CDaaT000P4HA7133.0
A8	168.3	175	C2P4HA8000.0	CDaaT000P4HA8168.3
	193.7			CDaaT000P4HA8193.7
	219.1			CDaaT000P4HA8219.1

Metal + Kaplama Tipi Metal + Surface Finishing		**Gövde Malzemesi** Clamp Body Material	
	Kaplamasız / Uncoated	A	Alüminyum / Aluminum
1	Fosfat / Phosphated / Fe/Znph	N	Polyamid / Polyamide
	Galvaniz / Galvanized / Fe/Zn 8C Cr3-B	T	TPE
4	CrNi 304 AISI 304	P	Polipropilen / Polypropylene
	CrNi 316 AISI 316		
9	Çinko Nikel / Zinc Nickel Fe/ZnNi		

Komple Kelepçe
Complete Clamp
90

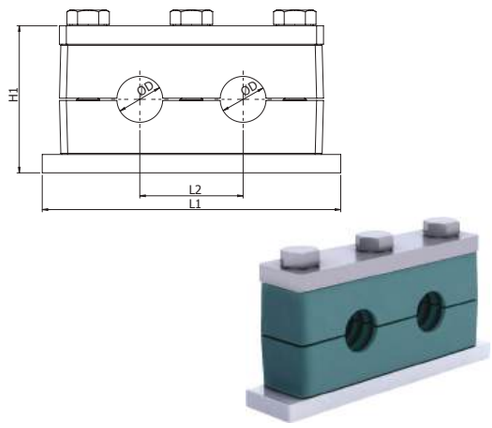

Kelepçe Gövdesi
Clamp Body
91

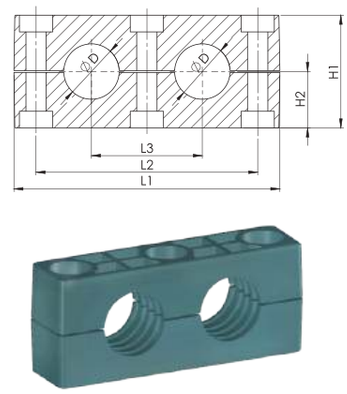

Sipariş Kodu / Order Code

Grup Group	Dış Çap (ØD) O.D. of Pipe / Tube/Hose mm	Anma Çapı (R) Boru Diş Nominal Bore Pipe inch	Kelepçe Gövdesi Clamp Body L1	L2	H1	Genişlik Width	Kelepçe Gövdesi Clamp Body	Kelepçe Gövdesi Clamp Body L1	L2	L3	H1	H2	Genişlik Width	Kelepçe Gövdesi Clamp Body
H2	19		130	45	64	30	CM40M131P1YH2019.0	115	90	45	48	24	30	C2P1YH2019.0
	20						CM40M131P1YH2020.0							C2P1YH2020.0
	21.3	R 1/2					CM40M131P1YH2021.3							C2P1YH2021.3
	22						CM40M131P1YH2022.0							C2P1YH2022.0
	25						CM40M131P1YH2025.0							C2P1YH2025.0
	25.4						CM40M131P1YH2025.4							C2P1YH2025.4
	26.9	R 3/4					CM40M131P1YH2026.9							C2P1YH2026.9
	28						CM40M131P1YH2028.0							C2P1YH2028.0
	30						CM40M131P1YH2030.0							C2P1YH2030.0
H3	30		160	60	76	30	CM40M131P1YH3030.0	144	120	60	60	30	30	C2P1YH3030.0
	32						CM40M131P1YH3032.0							C2P1YH3032.0
	33.7	R 1					CM40M131P1YH3033.7							C2P1YH3033.7
	35						CM40M131P1YH3035.0							C2P1YH3035.0
	38						CM40M131P1YH3038.0							C2P1YH3038.0
	40						CM40M131P1YH3040.0							C2P1YH3040.0
	42	R1 1/4					CM40M131P1YH3042.0							C2P1YH3042.0

*** İstek üzerine, ikiz seri boru kelepçelerinin delikleri birbirinden farklı çaplarda da üretilebilmektedir.**
* In twin series pipe clamps the diameter of each pipe hole can be produced with different size upon request.

Metal + Kaplama Tipi Metal + Surface Finishing		Gövde Malzemesi Clamp Body Material	
0	Kaplamasız / Uncoated	A	Alüminyum / Aluminum
1	Fosfat / Phosphated / Fe/Znph	N	Polyamid / Polyamide
3	Galvaniz / Galvanized / Fe/Zn 8C Cr3-B	T	TPE
4	CrNi 304 AISI 304	P	Polipropilen / Polypropylene
6	CrNi 316 AISI 316		
9	Çinko Nikel / Zinc Nickel Fe/ZnNi		

Alt Plaka / Weld Plate — 92

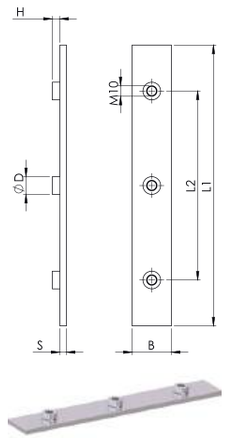

Üst Plaka / Cover Plate — 93

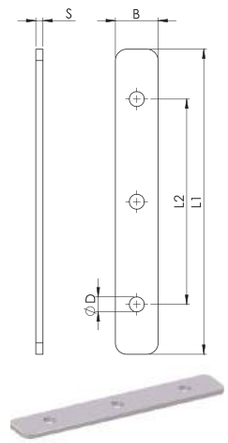

Altıköşe Başlı Cıvata / Hexagon Head Bolt — 94

DIN 931 / 933 - ISO 4014

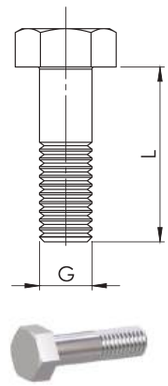

Sipariş Kodu / Order Code

Grup Group	Dış Çap (ØD) O.D. of Pipe / Tube/Hose mm	Anma Çapı (R) Boru Diş Nominal Bore Pipe inch	Alt Plaka Weld Plate	Üst Plaka Cover Plate	Altıköşe Başlı Cıvata Hexagon Head Bolt
H2	19		CA00M1H2	CU00T3H2	CCAM3010060
	20				
	21.3	R 1/2			
	22				
	25				
	25.4				
	26.9	R 3/4			
	28				
	30				
H3	30		CA00M1H3	CU00T3H3	CCAM3010070
	32				
	33.7	R 1			
	35				
	38				
	40				
	42	R1 1/4			

Ölçü Tablosu / Dimension Table

Grup Group	Dış Çap (ØD) O.D. of Pipe / Tube/Hose mm	Anma Çapı (R) Boru Diş Nominal Bore Pipe inch	Alt Plaka Weld Plate						Üst Plaka Cover Plate					Altıköşe Başlı Cıvata Hexagon Head Bolt
			L1	L2	B	S	H	ØD	L1	L2	B	S	ØD	GxL
H2	19		130	90	30	8	8.5	18	115	90	30	8	11	M10x60 3/8-16 UNC x 2-1/4
	20													
	21,3	R 1/2												
	22													
	25													
	25.4													
	26.9	R 3/4												
	28													
	30													
H3	30		160	120	30	8	8.5	18	144	120	30	8	11	M10x70 3/8-16 UNC x 2-3/4
	32													
	33.7	R 1/1												
	35													
	38													
	40													
	42	R1 1/4												

*** İstek üzerine, ikiz seri boru kelepçelerinin delikleri birbirinden farklı çaplarda da üretilebilmektedir.**

* In twin series pipe clamps the diameter of each pipe hole can be produced with different size upon request.

95

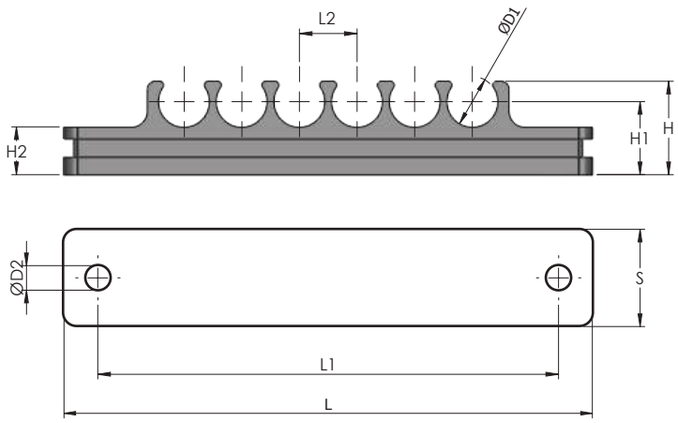

Ürün Kodu Product Code	ØD1 mm	ØD1 in.	Kanal Sayısı Number of Channels	L	L1	L2	H	H1	H2	S	ØD2
CXP2HP1003.20	3,2	1/8"	10	114	103	8	12,7	11,2	7	12,4	4,5
CXP2HP1006.35	6.3	1/4"	10	114	103	8	12.7	10.2	7	12.4	4,5
CXP2HP0609.53	9,5	3/8"	6	100	88	11	15,6	12,3	7,5	15,3	4,5
CXP2HP1009.52	9,5	3/8"	10	143	131	11	15.6	12.3	7.5	15.3	4,5
CXP2HP1012.70	12.7	1/2"	6	133	116	14.5	23.5	18.35	12	24,5	6.2
CXP2HP0619.00	19	3/4"	6	195	175	23	30,5	21,5	12	24,5	6.2
CXP2HP0625.40	25.4	1"	6	230	210	29	33,7	24,7	12	24,5	6,2

* Polipropilen, Polyamid ve TPE gruplarında talebe bağlı olarak UL 94 ve EN45545-2 standartlarına uygun V-0 yanmazlık sınıfında ürünler üretilebilmektedir.
Polyprpilene, Polyamide and TPE plastic parts could be V-0 resistend acc. to UL 94 and EN 45545-2 upon request.

WELCOME TO OUR NEW SHOWROOM!

DISCOVER MORE ON OUR NEW PRODUCTS

STRONGLYCONNECTED

LMC®

LMC®

METAL BORU KELEPÇELERİ

METAL PIPE CLAMPS

DIN 3567 / Type A
DIN 3567 / Type B
DIN 1592
DIN 1593
DIN 1596
DIN 1597

lmcmakina.com.tr

96

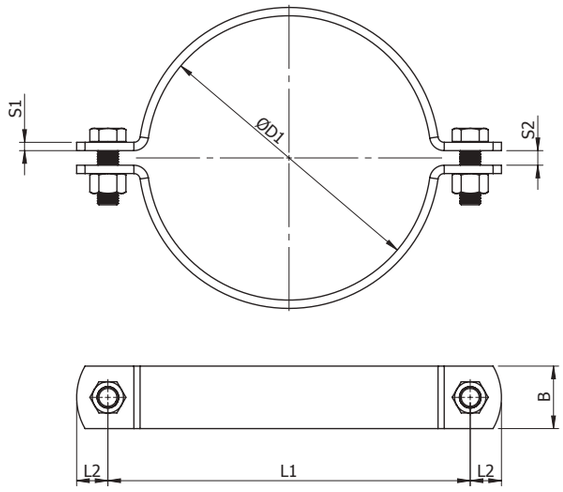

ØD1	Dış Çap (ØD) O.D. of Pipe / Tube/Hose mm	Anma Çapı (R) Boru Diş Nominal Bore Pipe inch	L1	L2	S1	S2	ØD2	B	Ek Parçalar Accessories	Sipariş Kodu Order Code
20	15		57	15	5	7	11.5	30	M10x30 M10	KM33567A.020
22			59							KM33567A.022
25	20		62							KM33567A.025
27		R 3/4	66							KM33567A.027
30	25		68							KM33567A.030
34		R 1	72							KM33567A.034
38	32		76							KM33567A.038
43		R 1 1/4	82							KM33567A.043
45	40		84							KM33567A.045
49		R 1 1/2	88							KM33567A.049
57	50		104	18	6	9	14	40	M12x35 M12	KM33567A.057
61		R 2	108							KM33567A.061
77	65	R 2 1/2	122							KM33567A.077
89	80	R 3	136							KM33567A.089
108	100		172	24	8	11	18	50	M16x45 M16	KM33567A.108
115		R 4	178							KM33567A.115
133	125		196							KM33567A.133
140		R 5	204							KM33567A.140
159	150		222							KM33567A.159
169		R 6	232							KM33567A.169
194	175		258							KM33567A.194
216	200		280							KM33567A.216
220			284							KM33567A.220
267	250		342	30	8	14	23	60	M20x50 M20	KM33567A.267
273			348							KM33567A.273
318	300		392							KM33567A.318
324			398							KM33567A.324
356	350		432							KM33567A.356
368			444							KM33567A.368
407	400		498	36	10	18	27	70	M24x60 M24	KM33567A.407
419			510							KM33567A.419
458	450		550							KM33567A.458
508	500		600							KM33567A.508
521			614							KM33567A.521
610	600		717							KM33567A.610
712	700		812							KM33567A.712
813	800		913							KM33567A.813
915	900		1016							KM33567A.915

97

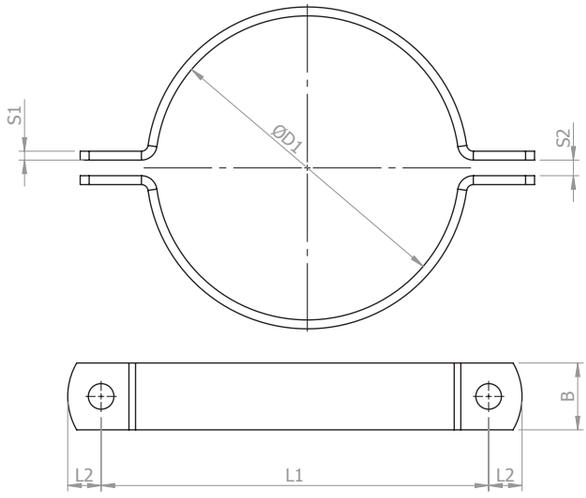

ØD1	Dış Çap (ØD) O.D. of Pipe / Tube/Hose mm	Anma Çapı (R) Boru Diş Nominal Bore Pipe inch	L1	L2	S1	S2	ØD2	B	Ek Parçalar Accessories	Sipariş Kodu Order Code
20	15		57	15	5	7	11.5	30	M10x30 M10	K233567A.020
22			59							K233567A.022
25	20		62							K233567A.025
27		R 3/4	66							K233567A.027
30	25		68							K233567A.030
34		R 1	72							K233567A.034
38	32		76							K233567A.038
43		R 1 1/4	82							K233567A.043
45	40		84							K233567A.045
49		R 1 1/2	88							K233567A.049
57	50		104	18	6	9	14	40	M12x35 M12	K233567A.057
61		R 2	108							K233567A.061
77	65	R 2 1/2	122							K233567A.077
89	80	R 3	136							K233567A.089
108	100		172	24	8	11	18	50	M16x45 M16	K233567A.108
115		R 4	178							K233567A.115
133	125	R 5	196							K233567A.133
140			204							K233567A.140
159	150	R 6	222							K233567A.159
169			232							K233567A.169
194	175		258							K233567A.194
216	200		280							K233567A.216
220			284							K233567A.220
267	250		342	30	8	14	23	60	M20x50 M20	K233567A.267
273			348							K233567A.273
318	300		392							K233567A.318
324			398							K233567A.324
356	350		432							K233567A.356
368			444							K233567A.368
407	400		498	36	10	18	27	70	M24x60 M24	K233567A.407
419			510							K233567A.419
458	450		550							K233567A.458
508	500		600							K233567A.508
521			614							K233567A.521
610	600		717							K233567A.610
712	700		812							K233567A.712
813	800		913							K233567A.813
915	900		1016							K233567A.915

98

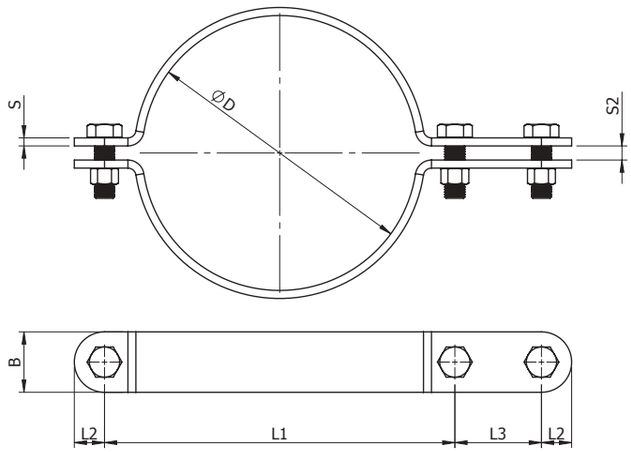

ØD1	Dış Çap (ØD) O.D. of Pipe / Tube/Hose mm	Anma Çapı (R) Boru Diş Nominal Bore Pipe inch	L1	L2	L3	S1	S2	ØD2	B	Ek Parçalar Accessories	Sipariş Kodu Order Code
20	15		57	15	46	5	7	11.5	30	M10x30 M10	KM33567B.020
22			59								KM33567B.022
25	20		62								KM33567B.025
27		R 3/4	66								KM33567B.027
30	25		68								KM33567B.030
34		R 1	72								KM33567B.034
38	32		76								KM33567B.038
43		R 1 1/4	82								KM33567B.043
45	40		84								KM33567B.045
49		R 1 1/2	88								KM33567B.049
57	50		104	18	54	6	9	14	40	M12x35 M12	KM33567B.057
61		R 2	108								KM33567B.061
77	65	R 2 1/2	122								KM33567B.077
89	80	R 3	136								KM33567B.089
108	100		172	24	70	8	11	18	50	M16x45 M16	KM33567B.108
115		R 4	178								KM33567B.115
133	125		196								KM33567B.133
140			204								KM33567B.140
159	150		222								KM33567B.159
169			232								KM33567B.169
194	175		258								KM33567B.194
216	200		280								KM33567B.216
220			284								KM33567B.220
267	250		342	30	86	8	14	23	60	M20x50 M20	KM33567B.267
273			348								KM33567B.273
318	300		392								KM33567B.318
324			398								KM33567B.324
368	350		444								KM33567B.368
407	400		498	36	104	10	18	27	70	M24x60 M24	KM33567B.407
419			510								KM33567B.419
521	500		614								KM33567B.521

99

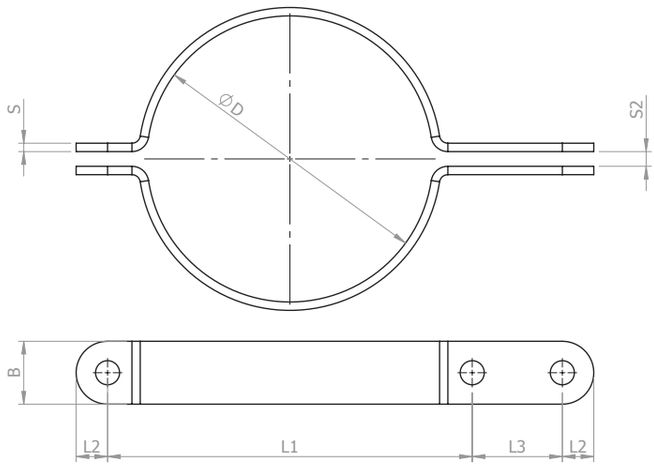

ØD1	Dış Çap (ØD) O.D. of Pipe / Tube/Hose mm	Anma Çapı (R) Boru Diş Nominal Bore Pipe inch	L1	L2	L3	S1	S2	ØD2	B	Ek Parçalar Accessories	Sipariş Kodu Order Code
20	15		57	15	46	5	7	11.5	30	M10x30 M10	K233567B.020
22			59								K233567B.022
25	20		62								K233567B.025
27		R 3/4	66								K233567B.027
30	25		68								K233567B.030
34		R 1	72								K233567B.034
38	32		76								K233567B.038
43		R 1 1/4	82								K233567B.043
45	40		84								K233567B.045
49		R 1 1/2	88								K233567B.049
57	50		104	18	54	6	9	14	40	M12x35 M12	K233567B.057
61		R 2	108								K233567B.061
77	65	R 2 1/2	122								K233567B.077
89	80	R 3	136								K233567B.089
108	100		172	24	70	8	11	18	50	M16x45 M16	K233567B.108
115		R 4	178								K233567B.115
133	125		196								K233567B.133
140			204								K233567B.140
159	150		222								K233567B.159
169			232								K233567B.169
194	175		258								K233567B.194
216	200		280								K233567B.216
220			284								K233567B.220
267	250		342	30	86	8	14	23	60	M20x50 M20	K233567B.267
273			348								K233567B.273
318	300		392								K233567B.318
324			398								K233567B.324
368	350		444								K233567B.368
407	400		498	36	104	10	18	27	70	M24x60 M24	K233567B.407
419			510								K233567B.419
521	500		614								K233567B.521

100

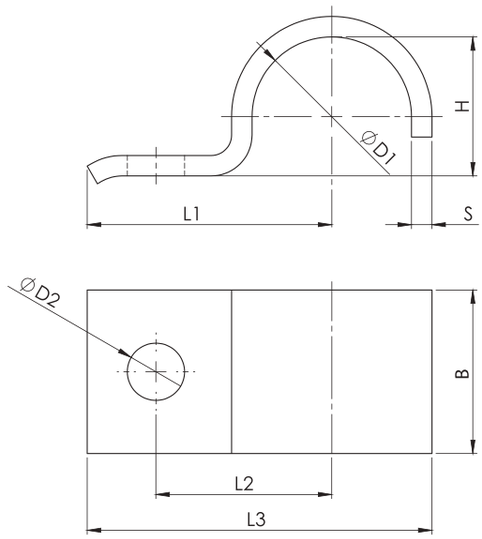

ØD1	Çap Aralığı Diameter Range	L1	L2	L3	H	D2	B	S	Sipariş Kodu Order Code
7	5,5- 7	22	14	27,5	5	6,6	16	2	K131592.007
9	7 - 9	27	18	33,5	6		20		K131592.009
13	9,5 - 13	40	25	49,5	9	11	25	3	K131592.013
15,5	13 - 15,5	41	26	52	12				K131592.015
19	15,5 - 19	43	28	55,5	15				K131592.019
23	20 - 23	51	35	67	19	14	30	5	K131592.023
26	23 - 26	52	36	70	22				K131592.026
28,5	26 - 28,5	53	37	73	24				K131592.028
31	28,5-31	55	39	75,5	27				K131592.031
36	33-36	57	41	81	32	14	40	5	K131592.036
39	36-39	59	43	83,5	34				K131592.039
43	39-43	68	48	94,5	38	18			K131592.043
46	43-46	70	50	98	41				K131592.046
49	46-49	73	53	105,5	44	18	40	8	K131592.049
52	49-52	76	56	110	47				K131592.052
58	53-58	78	58	115	52				K131592.058
61	58-61	80	60	118,5	57				K131592.061

101

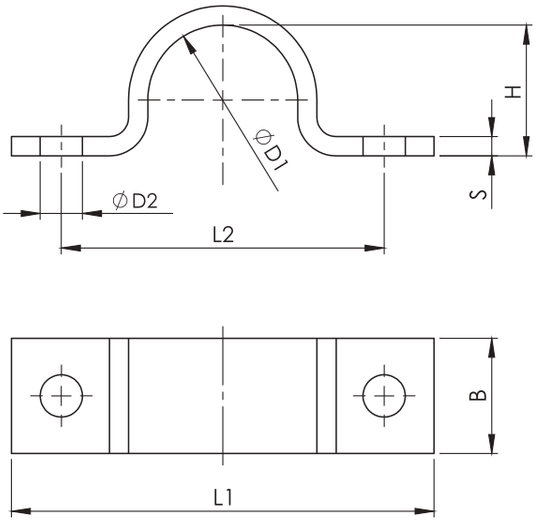

ØD1	Çap Aralığı Diameter Range	L1	L2	H	D2	B	S	Sipariş Kodu Order Code
7	5,5- 7	44	28	5	6,6	16	2	K131593.007
9	7 - 9	48	32	6		20	2	K131593.009
13	9,5 - 13	52	36	9				K131593.013
15,5	13 - 15,5	56	40	12				K131593.015
19	15,5 - 19	60	44	15				K131593.019
23	20 - 23	82	56	19	11	25	3	K131593.023
26	23 - 26	84	58	22				K131593.026
28,5	26 - 28,5	90	64	24				K131593.028
31	28,5-31	90	64	27				K131593.031
36	33-36	106	80	32	11	30	5	K131593.036
39	36-39	110	84	34				K131593.039
43	39-43	120	88	38	14			K131593.043
46	43-46	122	90	41				K131593.046
49	46-49	122	90	44				K131593.049
58	53-58	142	110	52	14	40	5	K131593.058
61	58-61	142	110	57				K131593.061
71	67-71	152	120	66				K131593.071
77	73-77	176	136	72	18			K131593.077
81	77-81	184	144	76				K131593.081
91	86-91	198	158	85	18	40	8	K131593.091
103	99-103	214	174	98				K131593.103
109	105-109	220	180	104				K131593.109
115	110-115	226	186	109				K131593.115

102

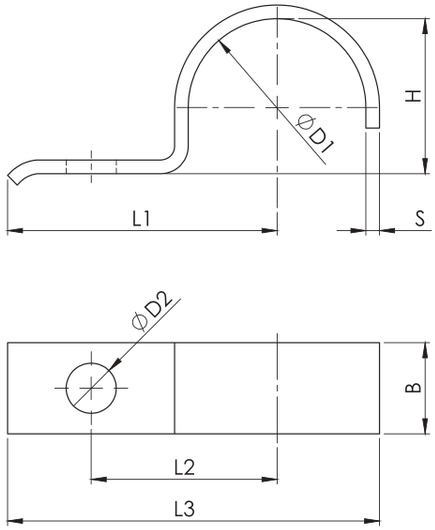

ØD1	Çap Aralığı Diameter Range	L1	L2	L3	H	D2	B	S	Sipariş Kodu Order Code
7	5,5- 7	26	14	31,5	5	6,6	16	2	K131596.007
9	7 - 9	28	16	34,5	6				K131596.009
13	9,5 - 13	30	18	38,5	9		20	2	K131596.013
15,5	13 - 15,5	32	20	41,8	12				K131596.015
19	15,5 - 19	34	22	45,5	15				K131596.019
23	20 - 23	43	28	57,5	19	9	25	3	K131596.023
26	23 - 26	44	29	60	22				K131596.026
28,5	26 - 28,5	47	32	64,5	24				K131596.028
31	28,5 - 31	47	32	65,5	27				K131596.031
33	31-33	56	36	75,5	29				K131596.033
36	33-36	57	40	78	32	11	30	3	K131596.036
39	36-39	59	42	81,5	34				K131596.039
43	39-43	61	44	85,5	38				K131596.043
46	43-46	62	45	88	41				K131596.046
49	46-49	67	48	95,5	44	14	40	4	K131596.049
52	49-52	72	53	102	47				K131596.052
58	53-58	74	55	107	52				K131596.058
61	58-61	77	58	11,5	56				K131596.061

103

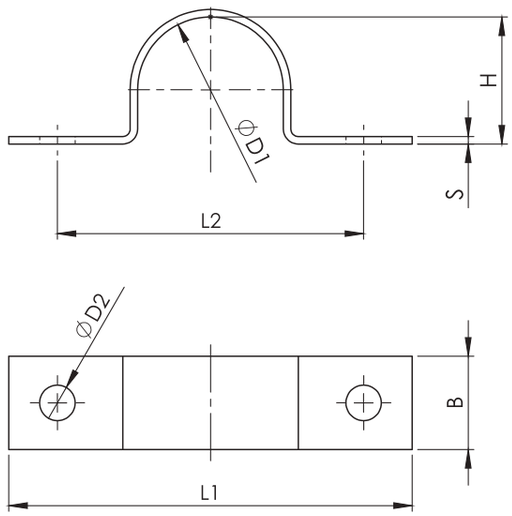

ØD1	Çap Aralığı Diameter Range	L1	L2	H	D2	B	S	Sipariş Kodu Order Code
7	5,5- 7	44	28	5	5,5	16	1,5	K131597.007
9	7 - 9	48	32	6				K131597.009
13	9,5 - 13	52	36	9				K131597.013
15,5	13 - 15,5	56	40	12				K131597.015
19	15,5 - 19	60	44	15				K131597.019
23	20 - 23	76	56	19	6,6	20	2	K131597.023
26	23 - 26	78	58	22				K131597.026
28,5	26 - 28,5	84	64	24				K131597.028
31	28,5 - 31	84	64	27				K131597.031
33	31-33	92	72	29				K131597.033
36	33-36	104	80	32	9	25	3	K131597.036
39	36-39	108	84	34				K131597.039
43	39-43	112	88	38				K131597.043
46	43-46	114	90	41				K131597.046
49	46-49	118	90	44	11	30	3	K131597.049
52	49-52	134	106	47				K131597.052
58	53-58	138	110	52				K131597.058
61	58-61	138	110	56				K131597.061

104

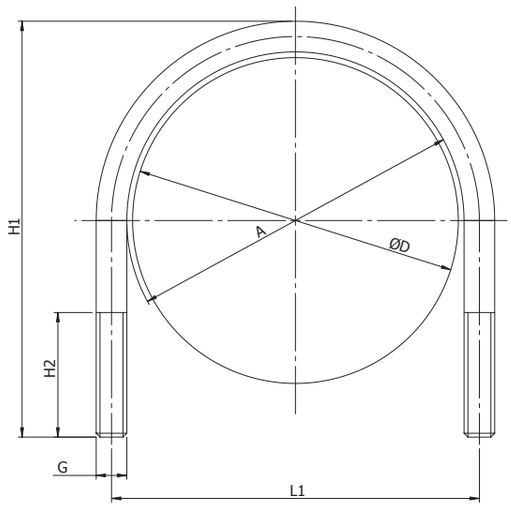

DN	Dış Çap (ØD) O.D. of Pipe / Tube/Hose mm	Anma Çapı (R) Boru Diş Nominal Bore Pipe inch	A	H1	H2	L	G	Sipariş Kodu Order Code
20	25	-	30	70	40	40	M10	UB0.300M10DN020
	26.9	3/4						
25	30	-	38	76		48		UB0.300M10DN025
	33.7	1						
32	38	-	46	86	50	56		UB0.300M10DN032
	42.4	1 1/4						
40	44.5	-	52	92		62		UB0.300M10DN040
	48.3	1 1/2						
50	57	-	64	109		76	M12	UB0.300M10DN050
	60.3	2						
65	76.1	2 1/2	82	125		94		UB0.300M10DN065
80	88.9	3	94	138		106		UB0.300M10DN080
100	108	-	120	171	60	136	M16	UB0.300M10DN100
	114.3	4						
125	133	-	148	191		164		UB0.300M10DN125
	139.7	5						
150	159	-	176	217		192		UB0.300M10DN150
	168.3	6						
175	191	-	202	249		218		UB0.300M10DN175
	193.7							
200	216	-	228	283	70	248	M20	UB0.300M10DN200
	219.1	8						
250	267	-	282	334		302		UB0.300M10DN250
	273	10						
300	318	-	332	385		352		UB0.300M10DN300
	323.9	12						
350	355.6	-	378	435		402	M24	UB0.300M10DN350
	368							
400	406.4	16	428	487		452		UB0.300M10DN400
	419	-						
500	508	-	530	589		554		UB0.300M10DN500
	521							

105

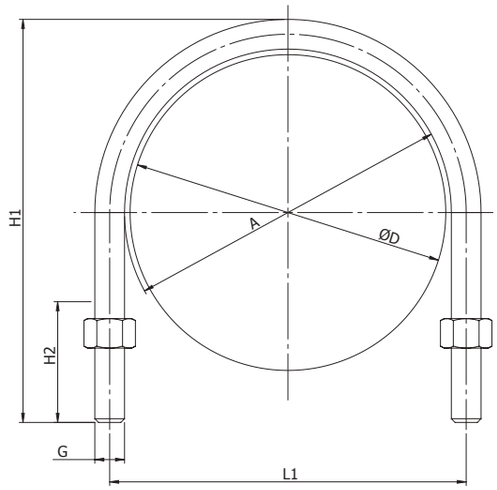

DN	Dış Çap (ØD) O.D. of Pipe / Tube/Hose mm	Anma Çapı (R) Boru Diş Nominal Bore Pipe inch	A	H1	H2	L	G	Sipariş Kodu Order Code
20	25	-	30	70	40	40	M10	UB2.330M10DN020
	26.9	3/4						
25	30	-	38	76		48		UB2.330M10DN025
	33.7	1						
32	38	-	46	86	50	56		UB2.330M10DN032
	42.4	1 1/4						
40	44.5	-	52	92		62		UB2.330M10DN040
	48.3	1 1/2						
50	57	-	64	109		76	M12	UB2.330M10DN050
	60.3	2						
65	76.1	2 1/2	82	125		94		UB2.330M10DN065
80	88.9	3	94	138		106		UB2.330M10DN080
100	108	-	120	171	60	136	M16	UB2.330M10DN100
	114.3	4						
125	133	-	148	191		164		UB2.330M10DN125
	139.7	5						
150	159	-	176	217		192		UB2.330M10DN150
	168.3	6						
175	191 193.7	-	202	249		218		UB2.330M10DN175
200	216	-	228	283	70	248	M20	UB2.330M10DN200
	219.1	8						
250	267	-	282	334		302		UB2.330M10DN250
	273	10						
300	318	-	332	385		352		UB2.330M10DN300
	323.9	12						
350	355.6 368	-	378	435		402	M24	UB2.330M10DN350
400	406.4	16	428	487		452		UB2.330M10DN400
	419	-						
500	508 521	-	530	589		554		UB2.330M10DN500

106

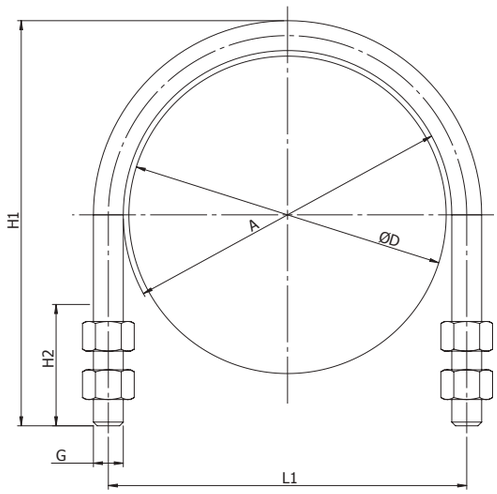

DN	Dış Çap (ØD) O.D. of Pipe / Tube/Hose mm	Anma Çapı (R) Boru Diş Nominal Bore Pipe inch	A	H1	H2	L	G	Sipariş Kodu Order Code
20	25	-	30	70	40	40	M10	UB4.330M10DN020
	26.9	3/4						
25	30	-	38	76		48		UB4.330M10DN025
	33.7	1						
32	38	-	46	86	50	56		UB4.330M10DN032
	42.4	1 1/4						
40	44.5	-	52	92		62		UB4.330M10DN040
	48.3	1 1/2						
50	57	-	64	109		76	M12	UB4.330M10DN050
	60.3	2						
65	76.1	2 1/2	82	125		94		UB4.330M10DN065
80	88.9	3	94	138		106		UB4.330M10DN080
100	108	-	120	171	60	136	M16	UB4.330M10DN100
	114.3	4						
125	133	-	148	191		164		UB4.330M10DN125
	139.7	5						
150	159	-	176	217		192		UB4.330M10DN150
	168.3	6						
175	191	-	202	249		218		UB4.330M10DN175
	193.7							
200	216	-	228	283	70	248	M20	UB4.330M10DN200
	219.1	8						
250	267	-	282	334		302		UB4.330M10DN250
	273	10						
300	318	-	332	385		352		UB4.330M10DN300
	323.9	12						
350	355.6	-	378	435		402	M24	UB4.330M10DN350
	368							
400	406.4	16	428	487		452		UB4.330M10DN400
	419	-						
500	508	-	530	589		554		UB4.330M10DN500
	521							

107

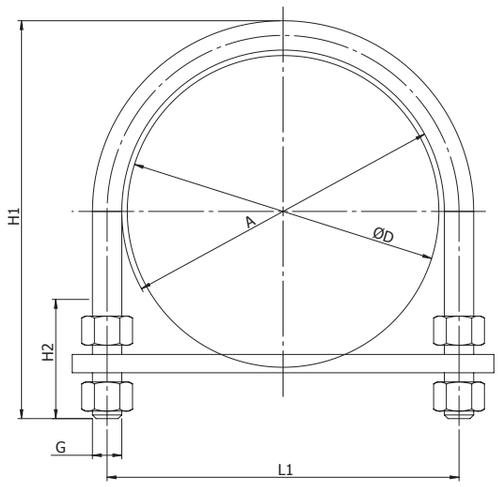

DN	Dış Çap (ØD) O.D. of Pipe / Tube/Hose mm	Anma Çapı (R) Boru Diş Nominal Bore Pipe inch	A	H1	H2	L	G	Sipariş Kodu Order Code
20	25	-	30	70	40	40	M10	UBL.333M10DN020
	26.9	3/4						
25	30	-	38	76		48		UBL.333M10DN025
	33.7	1						
32	38	-	46	86	50	56		UBL.333M10DN032
	42.4	1 1/4						
40	44.5	-	52	92		62		UBL.333M10DN040
	48.3	1 1/2						
50	57	-	64	109		76	M12	UBL.333M10DN050
	60.3	2						
65	76.1	2 1/2	82	125		94		UBL.333M10DN065
80	88.9	3	94	138		106		UBL.333M10DN080
100	108	-	120	171	60	136	M16	UBL.333M10DN100
	114.3	4						
125	133	-	148	191		164		UBL.333M10DN125
	139.7	5						
150	159	-	176	217		192		UBL.333M10DN150
	168.3	6						
175	191 193.7	-	202	249		218		UBL.333M10DN175
200	216	-	228	283	70	248	M20	UBL.333M10DN200
	219.1	8						
250	267	-	282	334		302		UBL.333M10DN250
	273	10						
300	318	-	332	385		352		UBL.333M10DN300
	323.9	12						
350	355.6 368	-	378	435		402	M24	UBL.333M10DN350
400	406.4	16	428	487		452		UBL.333M10DN400
	419	-						
500	508 521	-	530	589		554		UBL.333M10DN500

METAL BORU KELEPÇELERİ
METAL PIPE CLAMPS

DIN 3567 Tip A ve B, DIN 1592, DIN 1593, DIN 1596, DIN 1597'ye uygun LMC metal boru kelepçeleri.

Bir metal boru kelepçesi iki kelepçe yarısından oluşur. Kaplamasız, galvanizli, kalın katmanlı pasifleştirilmiş veya sıcak daldırma galvanizli çelikten üretilirler. Boruların ve diğer bileşenlerin çelik kirişlere, profillere ve braketlere ve/veya zemine, duvara veya tavana sabitlenmesinde kullanılır.

LMC metal pipe clamps according to DIN 3567 Type A and B, DIN 1592, DIN 1593, DIN 1596, DIN 1597.

One metal pipe clamp consists of two clamp halves. Manufactured in uncoated, galvanised, thick-layer passivated or hot-dip galvanised steel. Used for fixing of tubes and other components to steel beams, profiles and brackets and/or to floor, wall or ceiling.

STRONGLYCONNECTED

LMC®

TEKNİK BİLGİ
TECHNICAL DATA

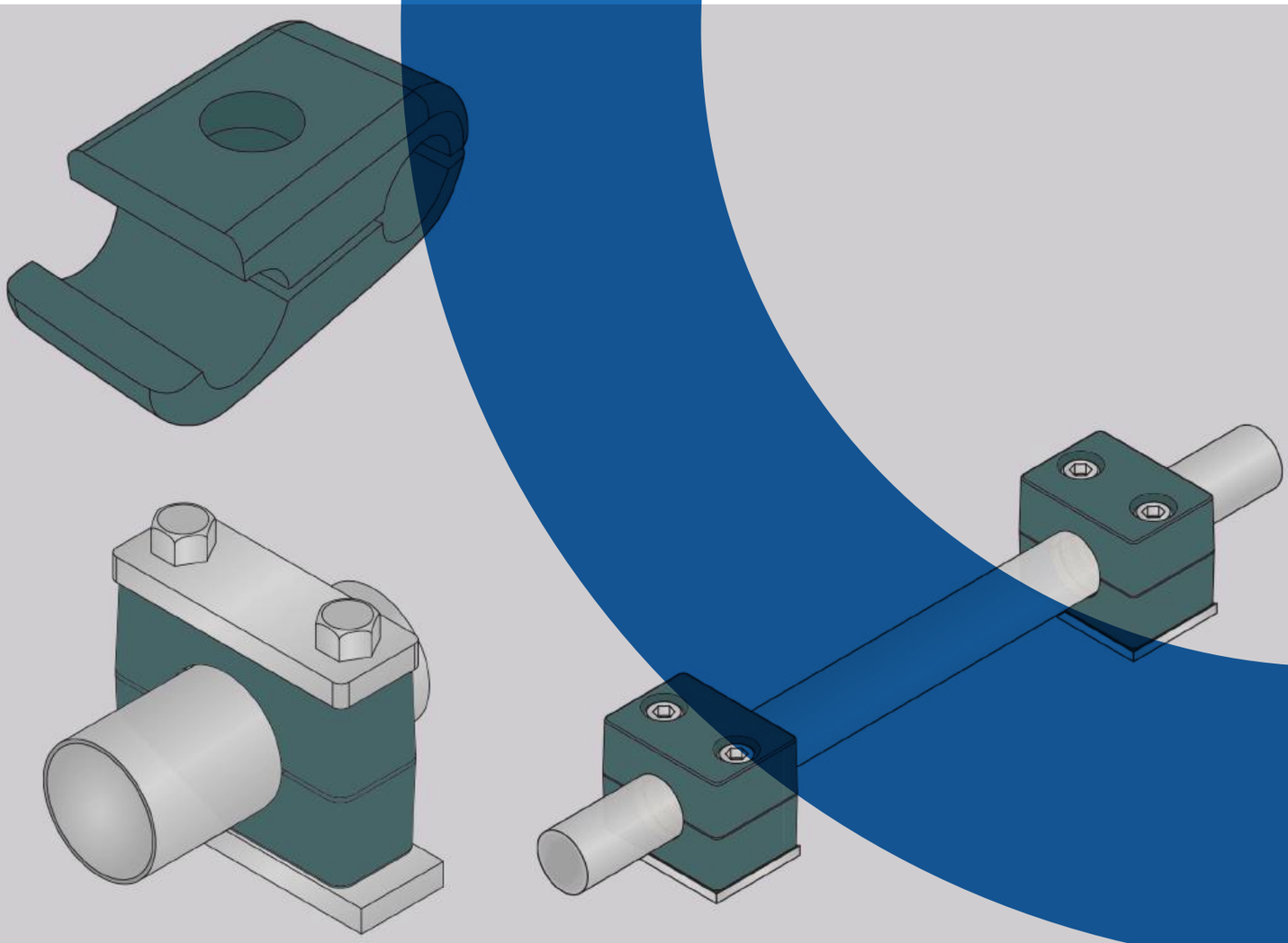

Standart Seri / Standard Series	Ağır Seri / Heavy Series	İkiz Seri / Twin Series
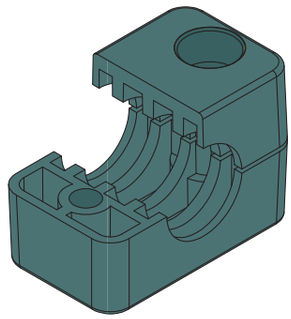 **Standart Tasarım** Standard Design	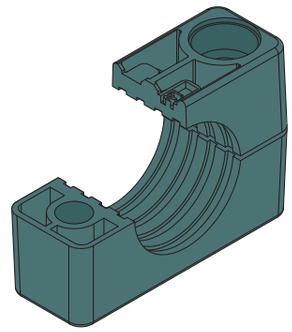 **Standart Tasarım** Standard Design	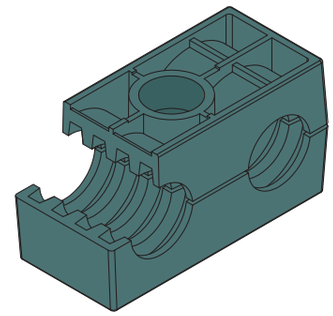 **Standart Tasarım** Standard Design
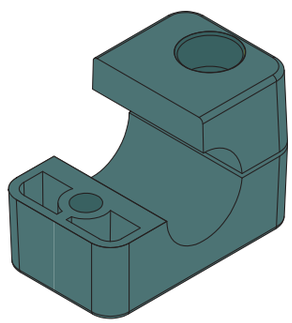 **G Biçimli Tasarım** **(Hortumlar için önerilir)** Form G Design (Recommended for Hoses)	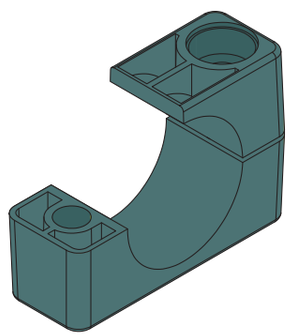 **G Biçimli Tasarım** **(Hortumlar için önerilir)** Form G Design (Recommended for Hoses)	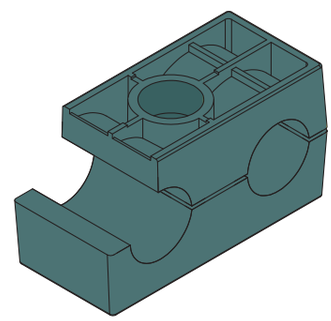 **G Biçimli Tasarım** **(Hortumlar için önerilir)** Form G Design (Recommended for Hoses)
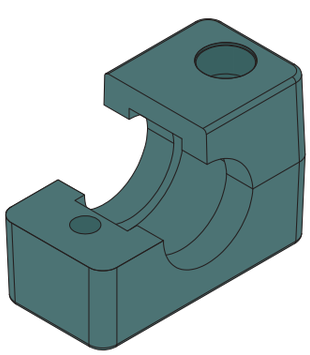 **E Biçimli Tasarım** **(Elastomerli Kelepçeler için)** Form E Design (For Elastomer Inserts)	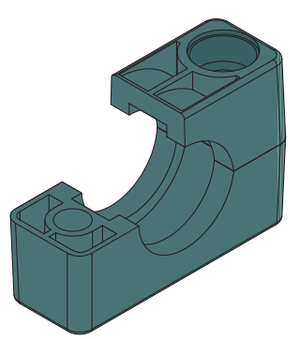 **E Biçimli Tasarım** **(Elastomerli Kelepçeler için)** Form E Design (For Elastomer Inserts)	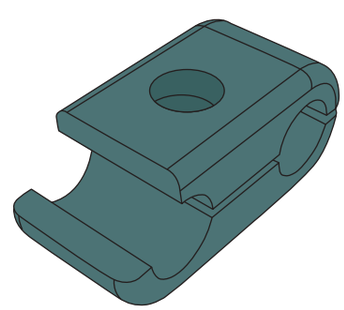 **L Biçimli Tasarım** **(Borular/hortumlar için önerilir)** Form L Design (Recommended for Hoses/Pipes)

Kelepçe Bağlantısı için Bırakılacak Ara Ölçüler
Kelepçelerin aralarında bulunması gereken uzaklık değerleri standarttır ve bu değerler statik yüklemeler için geçerlidir. Güvenli çalışma için daha kısa aralıklarla bağlantı yapılması önerilir. Yerden yüksekte bulunan boru hatlarındaki kelepçeler, boru hattının taşınması görevini de üstleniyorsa, yerleşim hesabında tabloda önerilen uzaklık değerlerinin yarısı alınmalıdır.

Spacings for Clamps
The given distances between the clamps are standart values that are valid for static loading. Choosing shorter distances between the clamps is recommended to have a secure operation. If the clamps are used as pipe fitting support for high pipe lines then half of the given distances must be used.

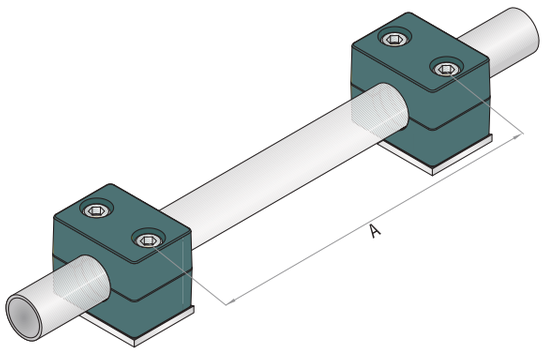

Boru Dış Çapı / Pipe-O.D. mm	Uzaklık / Distance A m
6.0 - 12.7	1.0
12.7 - 22.0	1.2
22.0 - 32.0	1.5
32.0 - 38.0	2.0
38.0 - 57.0	2.7
57.0 - 75.0	3.0
75.0 - 76.1	3.5
76.1 - 88.9	3.7
88.9 - 102.0	4.0
102.0 - 114.0	4.5
114.0 - 168.0	5.0
168.0 - 219.0	6.0
219.0 - 324.0	6.7
324.0 - 356.0	7.0
356.0 - 406.0	7.5
406.0 - 419.0	8.2
419.0 - 508.0	8.5
508.0 - 521.0	9.0
521.0 - 558.0	10.0
558.0 - 800.0	12.5

Kıvrımlı Boruların Bağlantısı
Kıvrımlı borularda kullanılacak kelepçeler büküm noktalarına olabildiğinde yakın bir şekilde ve boruların her iki tarafına yerleştirilmelidir.

Pipe Bend Installation
Clamps that are used at the bends must be located as close as possible to the bends at both sides.

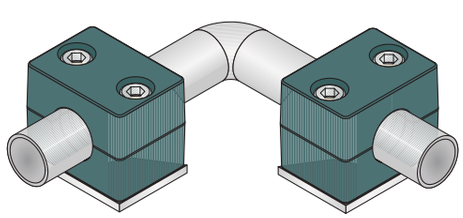

Boru Bağlantıları İçin Öneriler
Üstlendikleri görevi tam olarak gerçekleştirebilmeleri için, hangi tür bağlantı olursa olsun, kelepçelerin yerleştirildikleri yere çok iyi sabitlenmeleri gerekir.

Rakor kullanılan boru hatlarında, dişlerin sistem titreşiminden etkilenip çözülmesinin önlenebilmesi için, ilk kelepçe rakor bağlantısının hemen ardına yerleştirilmelidir.

Boru hattı üzerine yerleştirilmiş valf bulunuyorsa, hattın güvenli çalışmasını sağlamak için valfin önüne ve arkasına koyulacak kelepçeler ile borular sabitlenmelidir.

Suggestions for Pipe Installations
In order to fulfill their purpose, clamps must be fixed strongly in situ for all types of connections.

For the pipelines where fittings are used, to prevent the threads to be affected and loosen up, the first clamp must be placed right after the fitting.

If there are valves on pipeline, the pipes must be fixed using clamps right before and after the valves in order to provide safe operation of the system.

Diş Göstergesi / Thread Chart

Standart Seri / Standard Series

Grup No. Group No.	Metrik Vida Metric Thread	UNC Vida UNC Thread
G0	M6	1/4″ - 20 UNC
G1		
G2		
G3		
G4		
G5		
G6		
G7		
G8		

Diş Göstergesi / Thread Chart

Ağır Seri / Heavy Series

Grup No. Group No.	Metrik Vida Metric Thread	UNC Vida UNC Thread
A1	M10	3/8″ -16 UNC
A2		
A3		
A4	M12	7/16″ -14 UNC
A5	M16	5/8″ -11 UNC
A6	M20	3/4″ -10 UNC
A7	M24	7/8″ -9 UNC
A8	M30	11/8″ -7 UNC
A9		
A10		

Diş Göstergesi / Thread Chart

İkiz Seri / Twin Series

Grup No. Group No.	Metrik Vida Metric Thread	UNC Vida UNC Thread
I1	M6	1/4″ - 20 UNC
I2	M8	5/16″ -18 UNC
I3		
I4		
I5		

Boru Sıkma Kuvvetleri ve Maksimum Eksenel Yük Değerleri
Tüm sıkma kuvvetleri ve boru üzerindeki maksimum eksenel yük değerleri, çift plakalı ve altıköşe başlı cıvata (DIN 931/933) ile bağlantı yapılmış kelepçeler içindir.

Boru üzerindeki maksimum eksenel yükler (DIN 3015/10'a göre) ortalama bir değerdir ve çelik çekme boru (DIN 2448, St37) ile 23°C sıcaklıkta yüzey sürtünme değerleri göz önüne alınarak yapılan 3 deney sonucu belirlenmiştir.

Belirlenen F değerine ulaşıldığında kayma başlar.

Tightening Torques and Maximum Loads in Pipe Direction
All values supplied for tightening torques and maximum loads in pipe direction are given for clamps with cover plates and hexagon head bolts acc. to (DIN 931/933).

Maximum loads in pipe direction (acc. to DIN 3015 part 10) given below are avarage values, obtained from three tests at 23°C with a steel pipe. (acc. to DIN 2448. St 37)

When the values (F) given below are reached, sliding starts.

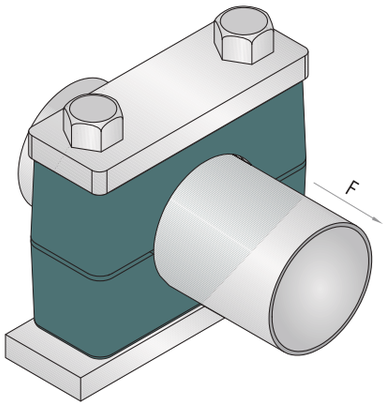

Standart Seri / Standard Series (DIN 3015/1)

Grup No. Group No.	Altıköşe Başlı Cıvata Hexagon Head Bolt	Polipropilen / Polypropilen		Polyamid / Polyamide		Alüminyum / Aluminium	
		Sıkma Torku Tightening Torque (Nm)	Max. Yük Max. Load (F) KN	Sıkma Torku Tightening Torque (Nm)	Max. Yük Max. Load (F) KN	Sıkma Torku Tightening Torque (Nm)	Max. Yük Max. Load (F) KN
G0	M6	8	0.6	10	0.6	-	-
G1		8	1.1	10	0.7	12	4.2
G2		8	1.3	10	0.8	12	4.3
G3		8	1.4	10	1.6	12	4.9
G4		8	1.5	10	1.7	12	5.0
G5		8	1.9	10	2.0	12	7.3
G6		8	2.0	10	2.5	12	8.9

Ağır Seri / Heavy Series (DIN 3015/2)

Grup No. Group No.	Altıköşe Başlı Cıvata Hexagon Head Bolt	Polipropilen / Polypropilen		Polyamid / Polyamide		Alüminyum / Aluminium	
		Sıkma Torku Tightening Torque (Nm)	Max. Yük Max. Load (F) KN	Sıkma Torku Tightening Torque (Nm)	Max. Yük Max. Load (F) KN	Sıkma Torku Tightening Torque (Nm)	Max. Yük Max. Load (F) KN
A1	M10	12	1.6	20	4.2	30	12.1
A2		12	2.9	20	4.5	30	15.1
A3		15	3.3	25	5.1	35	15.5
A4	M12	30	8.2	40	9.3	55	29.4
A5	M16	45	11.0	55	25.8	120	34.8
A6	M20	80	14.0	150	21.0	220	50.0
A7	M24	110	28.0	200	32.0	250	70.6
A8	M30	180	40.0	350	48.0	500	84.5
A9		200	119.0	370	125.0	500	181.5
A10		270	168.0	470	180.0	600	244.5

İkiz Seri / Twin Series (DIN 3015/3)

Grup No. Group No.	Altıköşe Başlı Cıvata Hexagon Head Bolt	Polipropilen / Polypropilen		Polyamid / Polyamide	
		Sıkma Torku Tightening Torque (Nm)	Max. Yük Max. Load (F) KN	Sıkma Torku Tightening Torque (Nm)	Max. Yük Max. Load (F) KN
I1	M6	5	0.9	5	0.95
I2	M8	12	2.1	12	2.20
I3			1.9		2.00
I4			2.7		2.95
I5		8	1.7	8	2.50

Kelepçe Gövdesi Malzemeleri ve Malzeme Özellikleri / Clamp Body Materials and Materials Properties				
	P	N	A	T
Kelepçe Gövde Malzemeleri Clamp Body Materials	Polipropilen (Kopolimer) PP Polypropilene (Copolymer) PP	Polyamid PA Polyamide PA	Alüminyum AL Aluminium AL	Termoplastik Elastomer TPE Thermoplastic Elastomer TPE
Mekanik Özellikler Mechanical Properties				
Izod Darbe Dayanımı (Çentikli, 23°C) Izod Impact Strength (Notched, 23°C)	> 40 KJ/m² ISO 180	> 5 KJ/m² ISO 180	---	---
Izod Darbe Dayanımı (Çentikli, -30°C) Izod Impact Strength (Notched, -30°C)	> 6 KJ/m² ISO 180	> 2 KJ/m² ISO 180	---	---
Elastisite Modülü Modulus of Elasticity	1200 - 1250 N/mm² ISO 527-2	> 2000 N/mm² ISO 527-2	70.000 N/mm²	3.6 N/mm² (Modulus @100) ASTM D 412
Çekme Dayanımı Tensile Strength at Yield	> 23 N/mm² ISO 527-2	> 60 N/mm² ISO 527-2	> 160 N/mm² DIN EN 10002	> 3.95 N/mm² ASTM D 412
Sertlik Hardness	> 80 ISO 2039-2 (Rockwell-R)	> 70 ISO 868 (Shore D)	> 80 Brinell Hardness	> 85 ASTM D 2240 (Shore A)
Isıl Özellikler Thermal Properties				
Önerilen Sıcaklık Aralığı Recommended Temperature Range	-30°C + 90°C	-40°C + 120°C	Max. 300°C	-40°C + 120°C
Kimyasal Özellikler Chemical Properties				
Zayıf Asitler, Solventler Weak Acids, Solvents	Koşula Bağlı Dayanıklı Conditionally Consistent	Koşula Bağlı Dayanıklı Conditionally Consistent	Koşula Bağlı Dayanıklı Conditionally Consistent	Dayanıklı Consistent
Benzin, Madeni Yağlar Benzine, Mineral Oils	Koşula Bağlı Dayanıklı Conditionally Consistent	Dayanıklı Consistent	Dayanıklı Consistent	Koşula Bağlı Dayanıklı Conditionally Consistent
Alkol, Diğer Yağlar, Deniz Suyu Alcohol, Other Oils, Seawater	Dayanıklı Consistent	Dayanıklı Consistent	Dayanıklı Consistent	Dayanıklı Consistent

Tüm Metal Parçalar
- Standart olarak St-37-2 (S235JR-EN 10025)karbon çelikten üretilir. İstek üzerine, paslanmaz kalite 304 veya 316 olarak üretilebilmektedir.
- Standart olarak Fe/Zn 8C Cr3-B galvaniz kaplanır. İstek üzerine, kaplamasız veya fosfat kaplamalı üretilebilmektedir.
- Standart diş tipi metriktir. UNC, UNF gibi farklı diş tipleri de üretilebilmektedir.

All Metal Parts
- Are made of carbon steel St 37-2 (S235JR-EN 10025) as a standard. Stainless steel (AISI 304, AISI 316) is also available upon request.
- Coated with Fe/Zn 8C Cr3-B galvanized as standard. Untreaded, phosphated, zinc-nickel or other alternative surface finishing are available upon request.
- Are metric threaded as a standard. Other alternative threads such as UNC, UNF are avaliable upon request.

Plastik Parçalar
- Polipropilen, polyamid ve TPE gruplarında talebe bağlı olarak **UL 94 ve EN 45545-2** standardına uygun V-0 yanmazlık sınıfında ürünler üretilebilmektedir.

Plastic Parts
- Polypropilene, Polyamide and TPE plastic parts could be V-0 resistent acc. to **UL 94 and EN 45545-2** upon request.

Malzeme ve Kaplama Çeşitleri
Material and Surface Finishing

CrNi 316 Paslanmaz Çelik
AISI 316 Stainless Steel

CrNi 304 Paslanmaz Çelik
AISI 304 Stainless Steel

Karbon Çelik, Delta DMS Kaplamalı , Kırmızı Pas Dayanımı: 1.000 saat
Carbon Steel, Delta DMS coated, Red Rust Resistance: 1.000h.

Karbon Çelik, Çinko Nikel(Fe/ZnNi) Kaplama , Kırmızı Pas Dayanımı: 720 saat
Carbon Steel,Zinc/nickel(Fe/ZnNi) coated, Red Rust Resistance: 720h.

Karbon Çelik Fe/Znph Fosfat Kaplamalı
Carbon Steel Fe/Znph Phosphated

Karbon Çelik Fe/Zn 8C Galvaniz ve Mavi Krom Kaplamalı
Carbon Steel Fe/Zn 8C Galvanized and Blue-Chromating

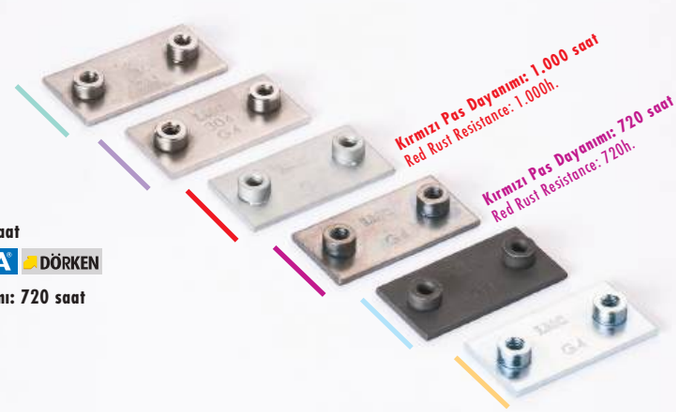

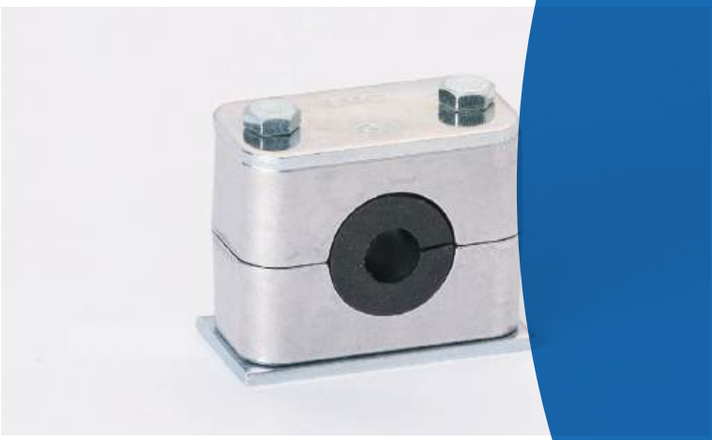

*** Plastik Enjeksiyon ve Talaşlı İmalatta, farklı uygulamalara yönelik tasarım ve üretim desteği.**
* Injection Moulded or Machined Product Design for various applications.

Dijital kataloğumuza buradan ulaşabilirsiniz.
You can download our digital catalog from here.

LMC Makina Sanayi ve Ticaret A.Ş.
Ankara Cad. No:3/1 35743 Bağyurdu - Kemalpaşa / İzmir / TÜRKİYE
Tel: +90 232 880 70 50 - Fax: +90 232 880 70 58
lmcmakina.com.tr